SITE DRAWINGS

ISSUE DATE : 05.10.2018

Generation II H3.2 Exterior Cladding Systems

Bevel Back Weatherboard - Cavity Fix

These environmental certifications have been awarded to MicroPro® Wood Treatment Technology

CAD REF : KLC CF20 BB00 COVER SHEET.dwg
DATE : 05/11/2018

Naturally Better

www.klc.co.nz

DETAILS MAY BE SUBJECT TO CHANGE WITHOUT NOTICE
COPYRIGHT © "KLC LIMITED" ALL RIGHTS ASSERTED

TYPE Generation II H3.2 Exterior Cladding Systems
Bevel Back Weatherboard - Cavity Fix

NAME A4 COVER SHEET - Site Details

CODEMARK™ AQ-020216-CMNZ

DRAWING SCALE	ISSUE DATE
N.T.S	26/10/2018

DRAWING No	REVISION
KLC CF20 BB01	

A4 Site Details - INDEX

Sheet Number	Sheet Title
KLC CF20 BB10	Window Head Detail - Aluminium Joinery
KLC CF20 BB11	Window Sill Detail - Aluminium Joinery
KLC CF20 BB12	Window Jamb Detail - Aluminium Joinery
KLC CF20 BB13	Window Flashing Details - Aluminium Joinery
KLC CF20 BB20	Door Head Detail - Aluminium Joinery
KLC CF20 BB21	Door Sill Detail - Aluminium Joinery
KLC CF20 BB22	Door Jamb Detail - Aluminium Joinery
KLC CF20 BB23	Door Flashing Details - Aluminium Joinery
KLC CF20 BB30	Meter Box - Head Detail
KLC CF20 BB31	Meter Box - Sill Detail
KLC CF20 BB32	Meter Box - Jamb Detail
KLC CF20 BB33	Meter Box - Flashing Details
KLC CF20 BB40	External Corner Soaker
KLC CF20 BB41	3D - External Corner Soaker
KLC CF20 BB42	Internal Corner
KLC CF20 BB43	3D - Internal Corner
KLC CF20 BB44	Weatherboard Fixing
KLC CF20 BB45	Scarf Joint - Horizontal
KLC CF20 BB50	External Boxed Corner
KLC CF20 BB51	3D - External Boxed Corner
KLC CF20 BB52	Internal Boxed Corner
KLC CF20 BB53	3D - Internal Boxed Corner
KLC CF20 BB54	Pipe Penetration
KLC CF20 BB55	3D - Pipe Penetration
KLC CF20 BB60	Base of Wall, Timber
KLC CF20 BB61	Base of Wall, Concrete
KLC CF20 BB62	Soffit Detail at Wall
KLC CF20 BB63	Soffit Detail at Fascia
KLC CF20 BB64	Apron Flashing - Roof to Wall Junction
KLC CF20 BB65	Balustrade Capping or Parapet Detail

DETAILS MAY BE SUBJECT TO CHANGE WITHOUT NOTICE
COPYRIGHT © "KLC LIMITED" ALL RIGHTS ASSERTED

TYPE Generation II H3.2 Exterior Cladding Systems
Bevel Back Weatherboard - Cavity Fix

NAME A4 INDEX - Site Details

CODEMARK™ AQ-020216-CMNZ

DRAWING SCALE	ISSUE DATE
N.T.S	26/10/2018

DRAWING No	REVISION
KLC CF20 BB02	

General Notes :

This documentation has been specifically designed to help Architects, Designers & Builders. They are grouped into Two Sections

A3 / A1 ARCHITECTURAL DRAWINGS :

The details are grouped together to make up completed A1 or A3 drawings.
eg WINDOW DETAILS (Head, Sill, Jamb & Flashing Details)

A4 SITE DRAWINGS :

The details in this section are full scale 1:2 at A4. You can easily read these drawings and are intended for the builder.

ARCHITECTS / DESIGNERS RESPONSIBILITY :

We have made the drawings as accurate as possible. We have even specified extra flashing's in some areas that are over and above the NZ Building Code E2/AS1 External Moisture.
But it is the Architects / Designers responsibility to confirm the suitability of these details for his particular projects and his client.
The Architect / Designer will need to determine the "RISK MATRIX" that is project specific, that then determines the details required.
Builder that have questions about these details, will need to contact there project specific Architect or Designer

TECHNICAL INFORMATION :

1. The AutoCAD drawings have all the Xref,s embedded as blocks.
   Erase the title block and Xref in your own title block.
2. These drawings have been KEY NOTED
   This makes the details more readable, people then focus on the actual important notes on the drawing. This also allows for easer revisions. You only need to change one key note reference. You will need to personalize these notes to make them specific for your project.
3. The Drawings are coloured and have pen assignments to the colours. a PGP file will be supplied in the Zip File. All the drawing output sheets are default set to print a PDF drawing. It is recommended that you print these detail in PDF then print your paper copies from the PDF File.
4. The AutoCAD drawings, are made up of multiple details, The A1/A3 output drawings also link into the A4 Detail drawings, These A4 drawings have special scaled down notes and blocks.
   (Annotative Scale) But it is the exact same information
5. These drawings are Copyrighted to " KLC LIMITED" (ALL RIGHTS ASSERTED) and there Approved Clients. The Drawings have two methods of Electronic protect.
   You will receive your own personal password to open the drawings.

LEGAL INFORMATION :

KLC Ltd and its Agent AIPdesigNZ Ltd have no reason to believe the information in the details are inaccurate.
KLC Ltd and its Agent AIPdesigNZ Ltd does not warrant the accuracy, adequacy or completeness of such information and we do not undertake to keep the information in the details updated.
KLC Ltd and its Agent AIPdesigNZ Ltd DOES NOT :

a) Give any assurances that the details and information will be suitable for your purposes, and you agree that you will not rely on the information and you will make your own independent assessments (with the aid of qualified independent advice)
b) Accept responsibility for any loss, damage (including indirect, special or consequential loss or damage), however caused (including through negligence) that you may directly or indirectly suffer in connection with your use of or reliance on the KLC & AIPdesigNZ Details, including the accuracy or currency of the KLC & AIPdesigNZ Details. Any condition, warranty, right or liability which would otherwise be implied is excluded.

COPYRIGHT © "KLC LIMITED" ALL RIGHTS ASSERTED

LEGEND:

- (PEF) PEF ROD BACKING: Foam backing rod with sealant to cavity in Window perimeter that forms a waterproof air-seal. (Sealant 2:1 Ratio)
- (AJ) ALUMINIUM JOINERY: Selected double glazed aluminium joinery
- (IL) INTERNAL LINING: Selected Internal Lining
- (BW) BUILDING WRAP: Flexible Wall Underlay, As per NZBC E2/AS1 - Table 23, In extra high wind zones, Ridgid Underlay required (9.1.7.2 E2/AS1)
- (CC) CAVITY CLOSURE: Cavity closure strip, positioned to give a 15mm Min drip edge to cladding
- (CB) CAVITY BATTEN: 45x20 KLC Generation II, MicroPro H3.2 FJ Cavity Batten to form a 20mm cavity
- (FT1) FLASHING TAPE: Flashing tape over wrap 70mm (50 min) turn-down required in corners only. Refer to Fig. 72 of NZBC E2/AS1
- (FT2) FLEXIBLE FLASHING TAPE: Flexible flashing tape lapped over aluminium head flashing or 2nd layer of Building Wrap to taped joint or top of frame
- (TF) TIMBER FRAME: H1.2 min treated timber framing
- (WB) WEATHER BOARD: KLC Generation II, MicroPro H3.2 Bevel Back Weatherboard. Profile to NZS 3617
- (IN) INSULATION: Selected Insulation
- (HF) HEAD FLASHING: Aluminium head flashing with minimum 15 degree fall and optional hemmed edges as per table 7 E2/AS1
- (TP) TIMBER PACKER: MicroPro H3.2 Treated Packer
- (SS) SILL SCRIBER: MicroPro H3.2, Horizontal batten under window as necessary to suit profile, sealant to back of sill scriber
- (WL) WINDOW LINER: As Specified (We Recommend MicroPro H3.2 Liners & Sills)
- (WH) WEATHERHEAD: MicroPro H3.2, Horizontal batten above window as necessary to suit profile, shaped to shed water, sealant to back of head scriber
- (WZ) WANZ SUPPORT: Provide window support as required by joinery manufacturer
- (WS) WINDOW SCRIBER: KLC Generation II, MicroPro H3.2 profile cut to fit weatherboard, sealant to back of scriber and 75 x 3.15mm Galvanised nail in 3mm predrilled hole. 40x18 or 65x18 depending on weatherboard size

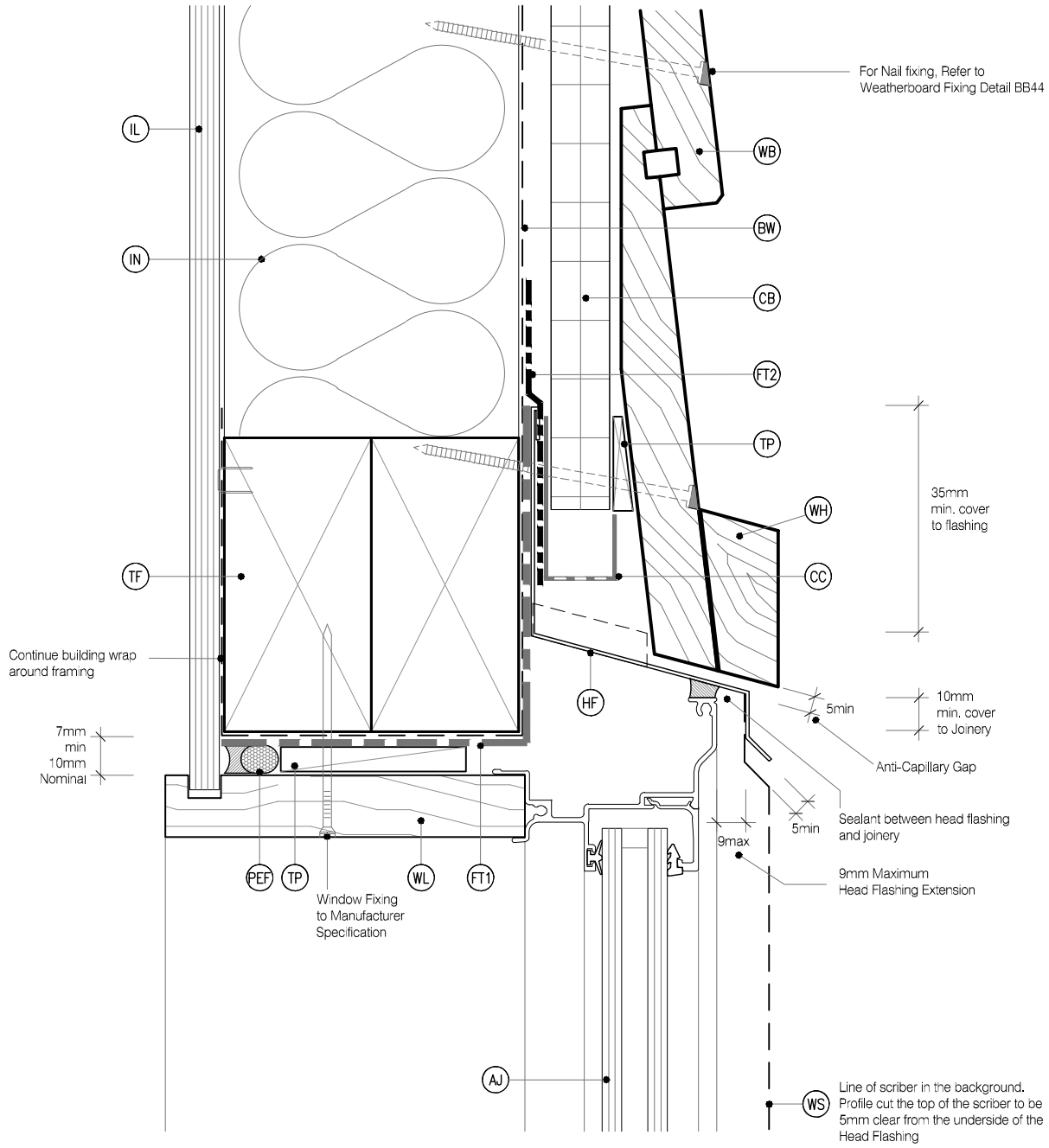

MicoPro® Wood Treatment Technology

1. KLC use the MicroPro Micronized Copper Azole (MCA) based preservative system for their wood products. It accounts for 80% of wood treated in the US for domestic applications
2. Micronized Copper Azole (MCA) preservatives are EPA-approved for use in NZ and AUS to NZS3640:2003 and AS1604.12012
3. MicroPro preservative is applied using high-pressure and vacuum-pressure in the impregnation process in KLC's modern, automated treatment facility.
4. Cut End Treatment : All cut ends surfaces are to be double coated and sealed before fixing. With a alkyd (oil based) primer
5. MicroPro preservative solution has benefits of reduced corrosivity. Use Hot Dip Galvanised Fasteners & Stainless Steel fasteners. MicroPro may be placed in direct contact with Aluminium Building products in interior applications, and above ground exterior applications that provide proper water drainage
6. MicroPro® is the first wood treatment process to be EPP (Environmentally Preferable Product) certified by Scientific Certification Systems based on a life cycle assessment.
7. MicroPro® is environmentally sustainable, is low leaching, low VOC emissions and the award of the GREENGUARD Children and Schools' Certification from the Greenguard® Environmental Institute.
8. MicroPro® Wood Treatment Technology has received a Global GreenTag GreenRate™ Level A this declaration is 'Fit-for-Purpose' and confirmed for Green Building compliance.
9. MicroPro® Wood Treatment Technology has received GreenTag PhD™ proving claims that MicroPro® is safe for human health (and ecosystems).

Naturally Better

www.klc.co.nz

DETAILS MAY BE SUBJECT TO CHANGE WITHOUT NOTICE
COPYRIGHT © "KLC LIMITED" ALL RIGHTS ASSERTED

TYPE Generation II H3.2 Exterior Cladding Systems
Bevel Back Weatherboard - Cavity Fix

NAME Window Head Detail - Aluminium Joinery

CODEMARK™ AQ-020216-CMNZ

DRAWING SCALE	ISSUE DATE
1:2 @ A4	26/10/2018

DRAWING No	REVISION
KLC CF20 BB10	1

CAD REF : KLC CF20 BB10-15 - WINDOW DETAILS.dwg
DATE : 05/11/2018

LEGEND:

- (PEF) PEF ROD BACKING: Foam backing rod with sealant to cavity in Window perimeter that forms a waterproof air-seal. (Sealant 2:1 Ratio)
- (AJ) ALUMINIUM JOINERY: Selected double glazed aluminium joinery
- (IL) INTERNAL LINING: Selected Internal Lining
- (BW) BUILDING WRAP: Flexible Wall Underlay, As per NZBC E2/AS1 - Table 23, In extra high wind zones, Ridgid Underlay required (9.1.7.2 E2/AS1)
- (CC) CAVITY CLOSURE: Cavity closure strip, positioned to give a 15mm Min drip edge to cladding
- (CB) CAVITY BATTEN: 45x20 KLC Generation II, MicroPro H3.2 FJ Cavity Batten to form a 20mm cavity
- (FT1) FLASHING TAPE: Flashing tape over wrap 70mm (50 min) turn-down required in corners only. Refer to Fig. 72 of NZBC E2/AS1
- (FT2) FLEXIBLE FLASHING TAPE: Flexible flashing tape lapped over aluminium head flashing or 2nd layer of Building Wrap to taped joint or top of frame
- (TF) TIMBER FRAME: H1.2 min treated timber framing
- (WB) WEATHER BOARD: KLC Generation II, MicroPro H3.2 Bevel Back Weatherboard. Profile to NZS 3617
- (IN) INSULATION: Selected Insulation
- (HF) HEAD FLASHING: Aluminium head flashing with minimum 15 degree fall and optional hemmed edges as per table 7 E2/AS1
- (TP) TIMBER PACKER: MicroPro H3.2 Treated Packer
- (SS) SILL SCRIBER: MicroPro H3.2, Horizontal batten under window as necessary to suit profile, sealant to back of sill scriber
- (WL) WINDOW LINER: As Specified (We Recommend MicroPro H3.2 Liners & Sills)
- (WH) WEATHERHEAD: MicroPro H3.2, Horizontal batten above window as necessary to suit profile, shaped to shed water, sealant to back of head scriber
- (WZ) WANZ SUPPORT: Provide window support as required by joinery manufacturer
- (WS) WINDOW SCRIBER: KLC Generation II, MicroPro H3.2 profile cut to fit weatherboard, sealant to back of scriber and 75 x 3.15mm Galvanised nail in 3mm predrilled hole. 40x18 or 65x18 depending on weatherboard size

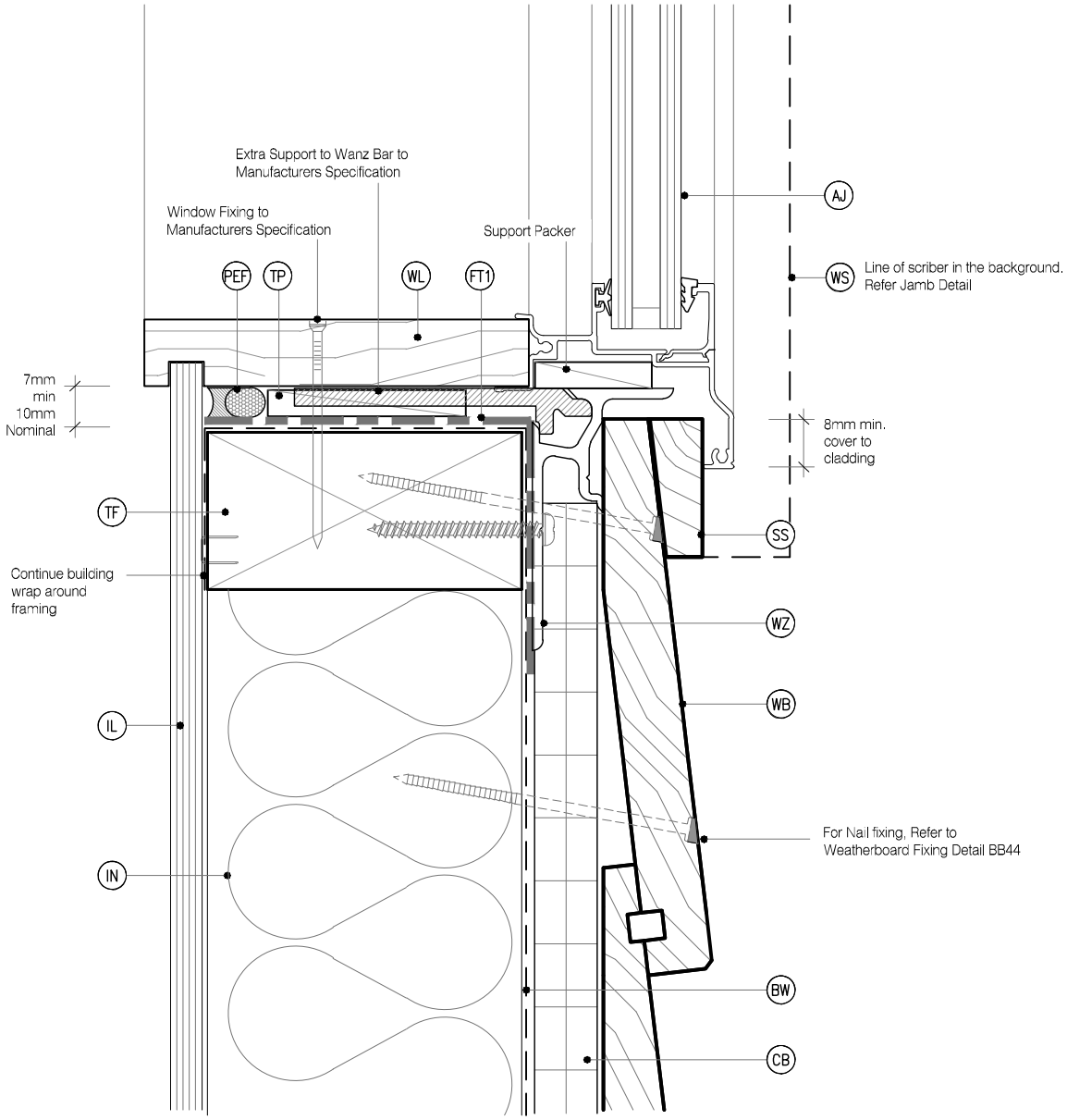

MicoPro® Wood Treatment Technology

1. KLC use the MicroPro Micronized Copper Azole (MCA) based preservative system for their wood products. It accounts for 80% of wood treated in the US for domestic applications
2. Micronized Copper Azole (MCA) preservatives are EPA-approved for use in NZ and AUS to NZS3640:2003 and AS1604.12012
3. MicroPro preservative is applied using high-pressure and vacuum-pressure in the impregnation process in KLC's modern, automated treatment facility.
4. Cut End Treatment : All cut ends surfaces are to be double coated and sealed before fixing. With a alkyd (oil based) primer
5. MicroPro preservative solution has benefits of reduced corrosivity. Use Hot Dip Galvanised Fasteners & Stainless Steel fasteners. MicroPro may be placed in direct contact with Aluminium Building products in interior applications, and above ground exterior applications that provide proper water drainage
6. MicroPro® is the first wood treatment process to be EPP (Environmentally Preferable Product) certified by Scientific Certification Systems based on a life cycle assessment.
7. MicroPro® is environmentally sustainable, is low leaching, low VOC emissions and the award of the GREENGUARD Children and Schools' Certification from the Greenguard® Environmental Institute.
8. MicroPro® Wood Treatment Technology has received a Global GreenTag GreenRate™ Level A this declaration is 'Fit-for-Purpose' and confirmed for Green Building compliance.
9. MicroPro® Wood Treatment Technology has received GreenTag PhD™ proving claims that MicroPro® is safe for human health (and ecosystems).

Naturally Better

www.klc.co.nz

DETAILS MAY BE SUBJECT TO CHANGE WITHOUT NOTICE
COPYRIGHT © "KLC LIMITED" ALL RIGHTS ASSERTED

TYPE Generation II H3.2 Exterior Cladding Systems
Bevel Back Weatherboard - Cavity Fix

NAME Window Sill Detail - Aluminium Joinery

CODEMARK™ AQ-020216-CMNZ

DRAWING SCALE	ISSUE DATE
1:2 @ A4	26/10/2018

DRAWING No	REVISION
KLC CF20 BB11	1

CAD REF : KLC CF20 BB10-15 - WINDOW DETAILS.dwg
DATE : 05/11/2018

LEGEND:

- (PEF) PEF ROD BACKING: Foam backing rod with sealant to cavity in Window perimeter that forms a waterproof air-seal. (Sealant 2:1 Ratio)
- (AJ) ALUMINIUM JOINERY: Selected double glazed aluminium joinery
- (IL) INTERNAL LINING: Selected Internal Lining
- (BW) BUILDING WRAP: Flexible Wall Underlay, As per NZBC E2/AS1 - Table 23, In extra high wind zones, Ridgid Underlay required (9.1.7.2 E2/AS1)
- (CC) CAVITY CLOSURE: Cavity closure strip, positioned to give a 15mm Min drip edge to cladding
- (CB) CAVITY BATTEN: 45x20 KLC Generation II, MicroPro H3.2 FJ Cavity Batten to form a 20mm cavity
- (FT1) FLASHING TAPE: Flashing tape over wrap 70mm (50 min) turn-down required in corners only. Refer to Fig. 72 of NZBC E2/AS1
- (FT2) FLEXIBLE FLASHING TAPE: Flexible flashing tape lapped over aluminium head flashing or 2nd layer of Building Wrap to taped joint or top of frame
- (TF) TIMBER FRAME: H1.2 min treated timber framing
- (WB) WEATHER BOARD: KLC Generation II, MicroPro H3.2 Bevel Back Weatherboard. Profile to NZS 3617
- (IN) INSULATION: Selected Insulation
- (HF) HEAD FLASHING: Aluminium head flashing with minimum 15 degree fall and optional hemmed edges as per table 7 E2/AS1
- (TP) TIMBER PACKER: MicroPro H3.2 Treated Packer
- (SS) SILL SCRIBER: MicroPro H3.2, Horizontal batten under window as necessary to suit profile, sealant to back of sill scriber
- (WL) WINDOW LINER: As Specified (We Recommend MicroPro H3.2 Liners & Sills)
- (WH) WEATHERHEAD: MicroPro H3.2, Horizontal batten above window as necessary to suit profile, shaped to shed water, sealant to back of head scriber
- (WZ) WANZ SUPPORT: Provide window support as required by joinery manufacturer
- (WS) WINDOW SCRIBER: KLC Generation II, MicroPro H3.2 profile cut to fit weatherboard, sealant to back of scriber and 75 x 3.15mm Galvanised nail in 3mm predrilled hole. 40x18 or 65x18 depending on weatherboard size

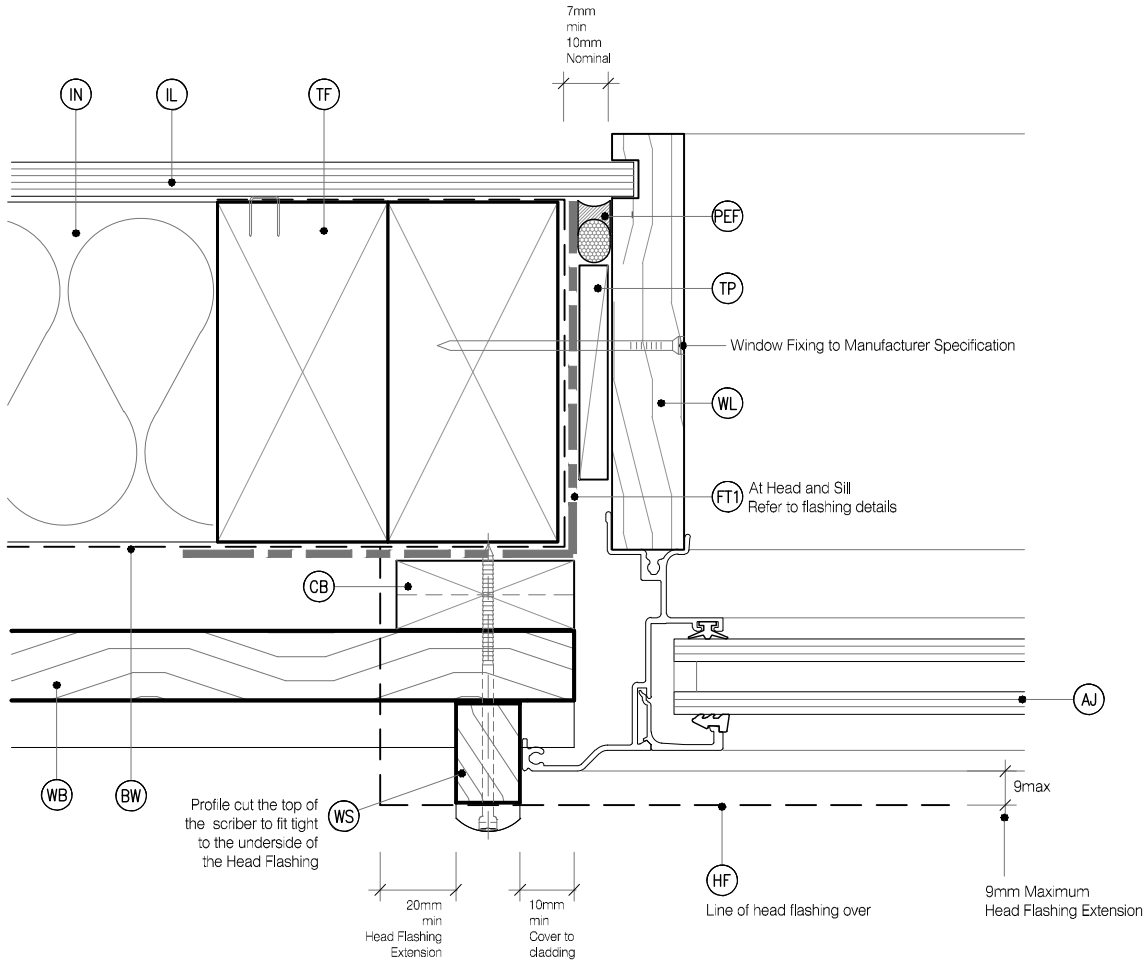

MicoPro® Wood Treatment Technology

1. KLC use the MicroPro Micronized Copper Azole (MCA) based preservative system for their wood products. It accounts for 80% of wood treated in the US for domestic applications
2. Micronized Copper Azole (MCA) preservatives are EPA-approved for use in NZ and AUS to NZS3640:2003 and AS1604.12012
3. MicroPro preservative is applied using high-pressure and vacuum-pressure in the impregnation process in KLC's modern, automated treatment facility.
4. Cut End Treatment : All cut ends surfaces are to be double coated and sealed before fixing. With a alkyd (oil based) primer
5. MicroPro preservative solution has benefits of reduced corrosivity. Use Hot Dip Galvanised Fasteners & Stainless Steel fasteners. MicroPro may be placed in direct contact with Aluminium Building products in interior applications, and above ground exterior applications that provide proper water drainage
6. MicroPro® is the first wood treatment process to be EPP (Environmentally Preferable Product) certified by Scientific Certification Systems based on a life cycle assessment.
7. MicroPro® is environmentally sustainable, is low leaching, low VOC emissions and the award of the GREENGUARD Children and Schools' Certification from the Greenguard® Environmental Institute.
8. MicroPro® Wood Treatment Technology has received a Global GreenTag GreenRate™ Level A this declaration is 'Fit-for-Purpose' and confirmed for Green Building compliance.
9. MicroPro® Wood Treatment Technology has received GreenTag PhD™ proving claims that MicroPro® is safe for human health (and ecosystems).

CAD REF : KLC CF20 BB10-15 - WINDOW DETAILS.dwg
DATE : 05/11/2018

Naturally Better

www.klc.co.nz

DETAILS MAY BE SUBJECT TO CHANGE WITHOUT NOTICE
COPYRIGHT © "KLC LIMITED" ALL RIGHTS ASSERTED

TYPE Generation II H3.2 Exterior Cladding Systems
Bevel Back Weatherboard - Cavity Fix

NAME Window Jamb Detail - Aluminium Joinery

CODEMARK™ AQ-020216-CMNZ

DRAWING SCALE	ISSUE DATE
1:2 @ A4	26/10/2018

DRAWING No	REVISION
KLC CF20 BB12	1

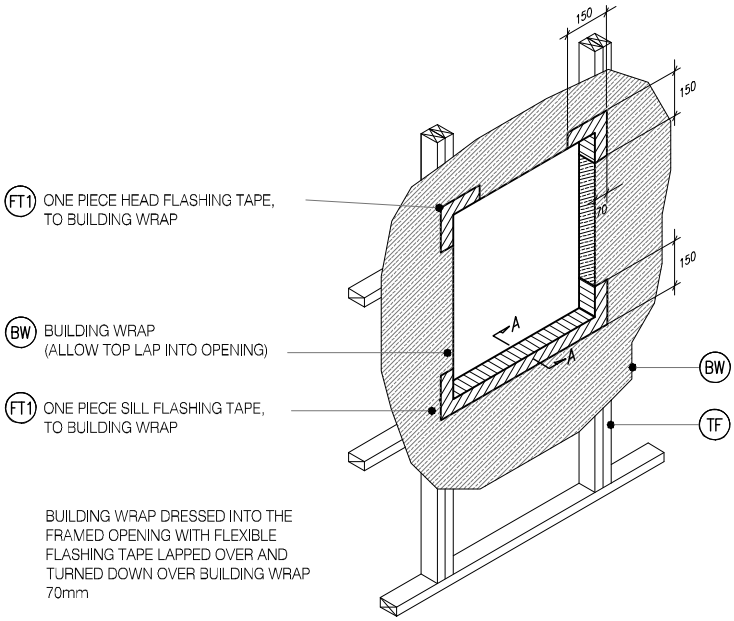

(FT1) ONE PIECE HEAD FLASHING TAPE, TO BUILDING WRAP

(BW) BUILDING WRAP (ALLOW TOP LAP INTO OPENING)

(FT1) ONE PIECE SILL FLASHING TAPE, TO BUILDING WRAP

BUILDING WRAP DRESSED INTO THE FRAMED OPENING WITH FLEXIBLE FLASHING TAPE LAPPED OVER AND TURNED DOWN OVER BUILDING WRAP 70mm

W4 BB13 TYPICAL WINDOW OPENING (FLASHING TAPE)

SCALE : N.T.S

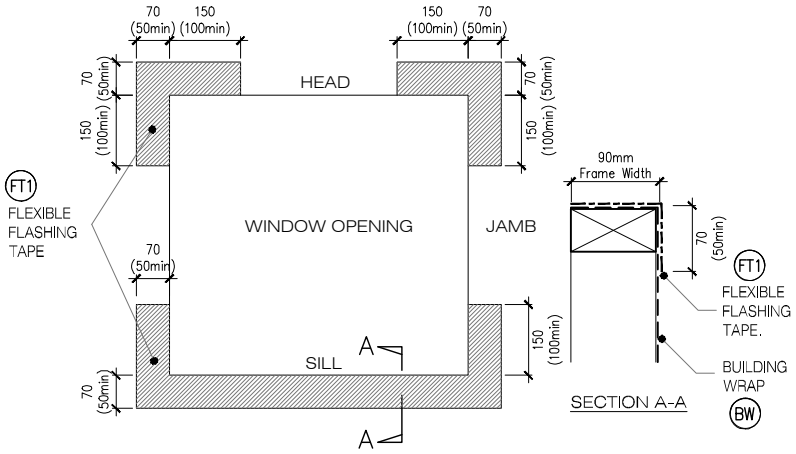

W5 BB13 FLEXIBLE BUILDING WRAP AT OPENING

SCALE : 1 / 5 @ A1, 1 / 10 @ A3

MicoPro® Wood Treatment Technology

1. KLC use the MicroPro Micronized Copper Azole (MCA) based preservative system for their wood products. It accounts for 80% of wood treated in the US for domestic applications
2. Micronized Copper Azole (MCA) preservatives are EPA-approved for use in NZ and AUS to NZS3640:2003 and AS1604.12012
3. MicroPro preservative is applied using high-pressure and vacuum-pressure in the impregnation process in KLC's modern, automated treatment facility.
4. Cut End Treatment : All cut ends surfaces are to be double coated and sealed before fixing. With a alkyd (oil based) primer
5. MicroPro preservative solution has benefits of reduced corrosivity. Use Hot Dip Galvanised Fasteners & Stainless Steel fasteners. MicroPro may be placed in direct contact with Aluminium Building products in interior applications, and above ground exterior applications that provide proper water drainage
6. MicroPro® is the first wood treatment process to be EPP (Environmentally Preferable Product) certified by Scientific Certification Systems based on a life cycle assessment.
7. **MicroPro® is environmentally sustainable, is low leaching, low VOC** emissions and the award of the GREENGUARD Children and Schools' Certification from the Greenguard® Environmental Institute.
8. MicroPro® Wood Treatment Technology has received a Global GreenTag GreenRate™ Level A this declaration is 'Fit-for-Purpose' and confirmed for Green Building compliance.
9. MicroPro® Wood Treatment Technology has received GreenTag PhD™ proving claims that MicroPro® is safe for human health (and ecosystems).

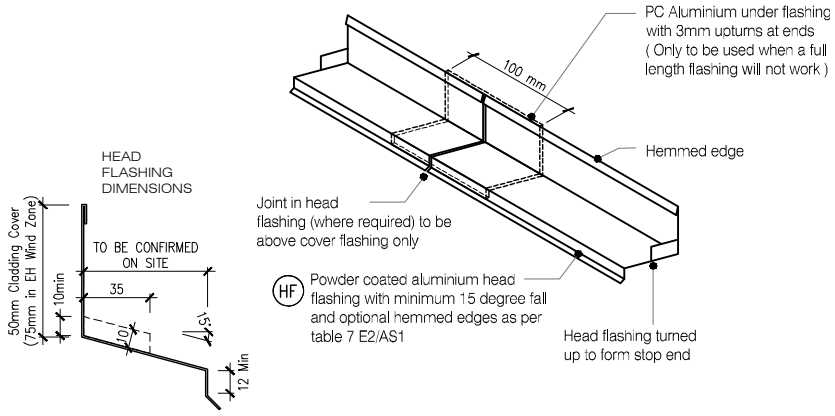

ONE PIECE PC ALUMINIUM HEAD FLASHING 15° SLOPE WITH 10mm min COVER TO JOINERY EXTEND 30mm min EITHER SIDE OF JOINERY WITH STOP ENDS

W6 BB13 TYPICAL HEAD & FLASHING JOINT

SCALE : 1 / 2 @ A1, 1 / 4 @ A3

CAD REF : KLC CF20 BB10-15 - WINDOW DETAILS.dwg
DATE : 05/11/2018

Naturally Better

www.klc.co.nz

DETAILS MAY BE SUBJECT TO CHANGE WITHOUT NOTICE
COPYRIGHT © "KLC LIMITED" ALL RIGHTS ASSERTED

TYPE Generation II H3.2 Exterior Cladding Systems
Bevel Back Weatherboard - Cavity Fix

NAME Window Flashing Details - Aluminium Joinery

CODEMARK™ AQ-020216-CMNZ

DRAWING SCALE	ISSUE DATE
1:4 @ A4	26/10/2018

DRAWING No	REVISION
KLC CF20 BB13	1

LEGEND:

- (PEF) PEF ROD BACKING: Foam backing rod with sealant to cavity in door perimeter that forms a waterproof air-seal. (Sealant 2:1 Ratio)
- (AJ) ALUMINIUM JOINERY: Selected double glazed aluminium joinery
- (IL) INTERNAL LINING: Selected Internal Lining
- (BW) BUILDING WRAP: Flexible Wall Underlay, As per NZBC E2/AS1 - Table 23, In extra high wind zones, Ridgid Underlay required (9.1.7.2 E2/AS1)
- (CC) CAVITY CLOSURE: Cavity closure strip, positioned to give a 15mm Min drip edge to cladding
- (CB) CAVITY BATTEN: 45x20 KLC Generation II, MicroPro H3.2 FJ Cavity Batten to form a 20mm cavity
- (FT1) FLASHING TAPE: Flashing tape over wrap 70mm (50 min) turn-down required in corners only. Refer to Fig. 72 of NZBC E2/AS1
- (FT2) FLEXIBLE FLASHING TAPE: Flexible flashing tape lapped over aluminium head flashing or 2nd layer of Building Wrap to taped joint or top of frame
- (TF) TIMBER FRAME: H1.2 min treated timber framing
- (WB) WEATHER BOARD: KLC Generation II, MicroPro H3.2 Bevel Back Weatherboard. Profile to NZS 3617
- (IN) INSULATION: Selected Insulation
- (HF) HEAD FLASHING: Aluminium head flashing with minimum 15 degree fall and optional hemmed edges as per table 7 E2/AS1
- (TP) TIMBER PACKER: MicroPro H3.2 Treated Packer
- (SS) SILL SCRIBER: MicroPro H3.2, Horizontal batten under window as necessary to suit profile
- (DL) DOOR LINER: As Specified (We Recommend MicroPro H3.2 Liners & Sills)
- (WH) WEATHERHEAD: MicroPro H3.2, Horizontal batten above window as necessary to suit profile, shaped to shed water, sealant to back of sill scriber
- (WZ) WANZ SUPPORT: Provide window support as required by joinery manufacturer
- (TP) TIMBER PACKER: MicroPro H3.2 Treated Packer
- (DS) DOOR SCRIBER: KLC Generation II, MicroPro H3.2 profile cut to fit weatherboard, sealant to back of scriber. 40x18 or 65x18 depending on weatherboard size

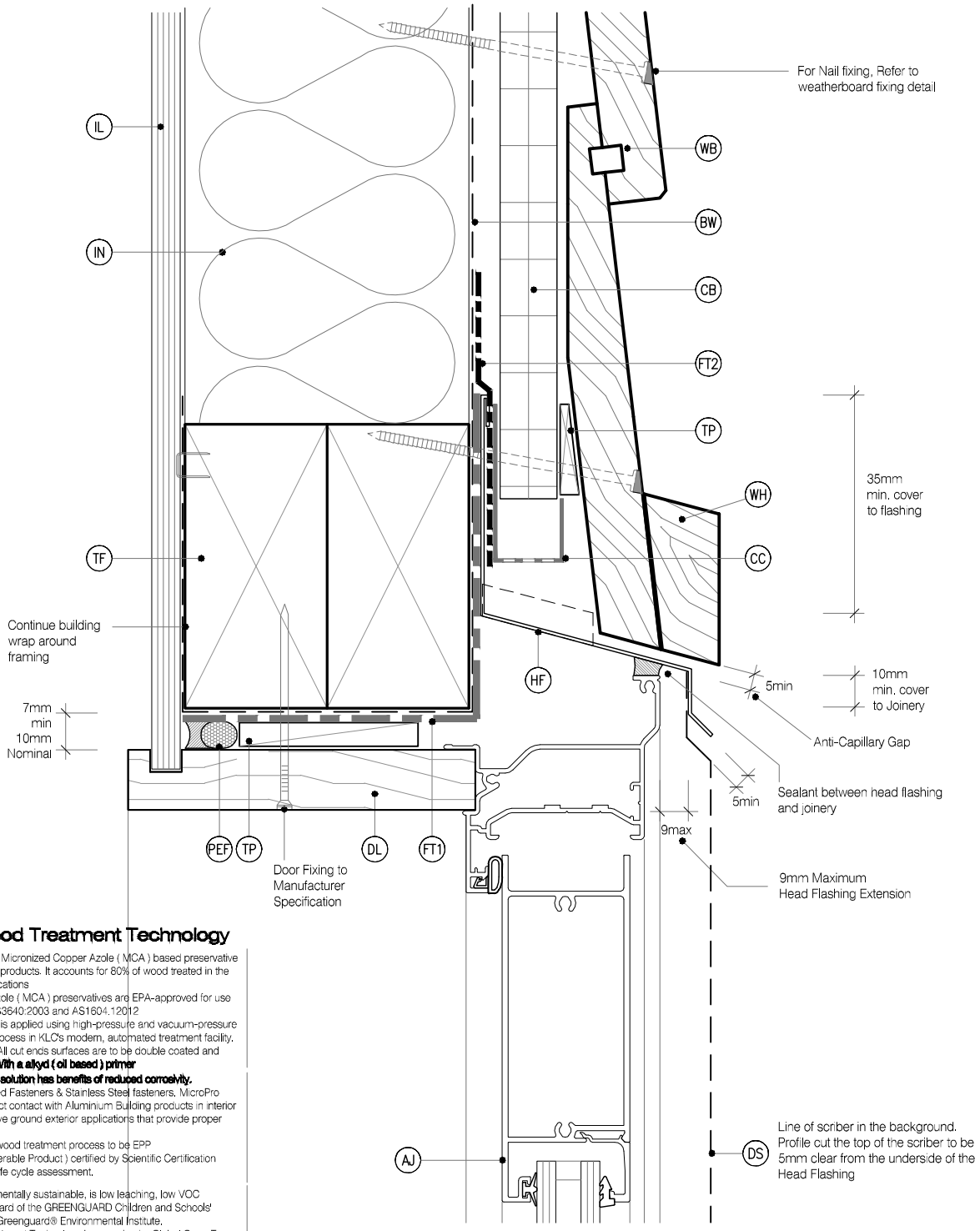

MicoPro® Wood Treatment Technology

1. KLC use the MicroPro Micronized Copper Azole (MCA) based preservative system for their wood products. It accounts for 80% of wood treated in the US for domestic applications
2. Micronized Copper Azole (MCA) preservatives are EPA-approved for use in NZ and AUS to NZS3640:2003 and AS1604.12012
3. MicroPro preservative is applied using high-pressure and vacuum-pressure in the impregnation process in KLC's modern, automated treatment facility.
4. Cut End Treatment : All cut ends surfaces are to be double coated and **sealed before fixing. With a alkyd (oil based) primer**
5. **MicroPro preservative solution has benefits of reduced corrosivity.** Use Hot Dip Galvanised Fasteners & Stainless Steel fasteners, MicroPro may be placed in direct contact with Aluminium Building products in interior applications, and above ground exterior applications that provide proper water drainage
6. MicroPro® is the first wood treatment process to be EPP (Environmentally Preferable Product) certified by Scientific Certification Systems based on a life cycle assessment.
7. MicroPro® is environmentally sustainable, is low leaching, low VOC emissions and the award of the GREENGUARD Children and Schools' Certification from the Greenguard® Environmental Institute.
8. MicroPro® Wood Treatment Technology has received a Global GreenTag GreenRate™ Level A this declaration is 'Fit-for-Purpose' and confirmed for Green Building compliance.
9. MicroPro® Wood Treatment Technology has received GreenTag PhD™ proving claims that MicroPro® is safe for human health (and ecosystems).

CAD REF : KLC CF20 BB20-25 - DOOR DETAILS.dwg
DATE : 05/11/2018

Naturally Better

www.klc.co.nz

DETAILS MAY BE SUBJECT TO CHANGE WITHOUT NOTICE

COPYRIGHT © "KLC LIMITED" ALL RIGHTS ASSERTED

TYPE Generation II H3.2 Exterior Cladding Systems
Bevel Back Weatherboard - Cavity Fix

NAME Door Head Detail - Aluminium Joinery

CODEMARK™ AQ-020216-CMNZ

DRAWING SCALE	ISSUE DATE
1:2 @ A4	26/10/2018

DRAWING No	REVISION
KLC CF20 BB20	1

LEGEND:

- (PEF) PEF ROD BACKING: Foam backing rod with sealant to cavity in door perimeter that forms a waterproof air-seal. (Sealant 2:1 Ratio)
- (AJ) ALUMINIUM JOINERY: Selected double glazed aluminium joinery
- (IL) INTERNAL LINING: Selected Internal Lining
- (BW) BUILDING WRAP: Flexible Wall Underlay, As per NZBC E2/AS1 - Table 23, In extra high wind zones, Ridgid Underlay required (9.1.7.2 E2/AS1)
- (CC) CAVITY CLOSURE: Cavity closure strip, positioned to give a 15mm Min drip edge to cladding
- (CB) CAVITY BATTEN: 45x20 KLC Generation II, MicroPro H3.2 FJ Cavity Batten to form a 20mm cavity
- (FT1) FLASHING TAPE: Flashing tape over wrap 70mm (50 min) turn-down required in corners only. Refer to Fig. 72 of NZBC E2/AS1
- (FT2) FLEXIBLE FLASHING TAPE: Flexible flashing tape lapped over aluminium head flashing or 2nd layer of Building Wrap to taped joint or top of frame
- (TF) TIMBER FRAME: H1.2 min treated timber framing
- (WB) WEATHER BOARD: KLC Generation II, MicroPro H3.2 Bevel Back Weatherboard. Profile to NZS 3617
- (IN) INSULATION: Selected Insulation
- (HF) HEAD FLASHING: Aluminium head flashing with minimum 15 degree fall and optional hemmed edges as per table 7 E2/AS1
- (TP) TIMBER PACKER: MicroPro H3.2 Treated Packer
- (SS) SILL SCRIBER: MicroPro H3.2, Horizontal batten under window as necessary to suit profile
- (DL) DOOR LINER: As Specified (We Recommend MicroPro H3.2 Liners & Sills)
- (WH) WEATHERHEAD: MicroPro H3.2, Horizontal batten above window as necessary to suit profile, shaped to shed water, sealant to back of sill scriber
- (WZ) WANZ SUPPORT: Provide window support as required by joinery manufacturer
- (TP) TIMBER PACKER: MicroPro H3.2 Treated Packer
- (DS) DOOR SCRIBER: KLC Generation II, MicroPro H3.2 profile cut to fit weatherboard, sealant to back of scriber. 40x18 or 65x18 depending on weatherboard size

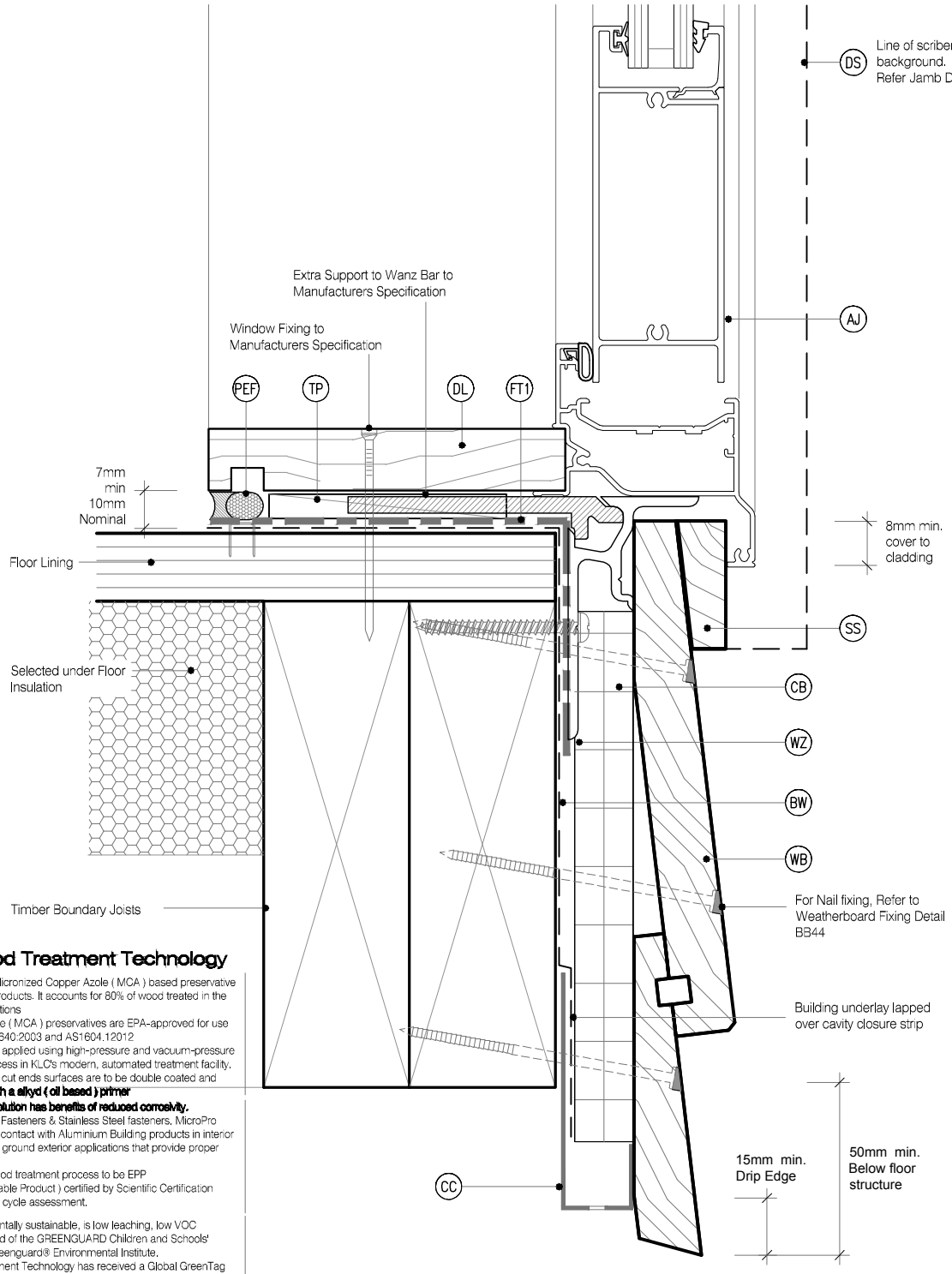

MicoPro® Wood Treatment Technology

1. KLC use the MicroPro Micronized Copper Azole (MCA) based preservative system for their wood products. It accounts for 80% of wood treated in the US for domestic applications
2. Micronized Copper Azole (MCA) preservatives are EPA-approved for use in NZ and AUS to NZS3640:2003 and AS1604.12012
3. MicroPro preservative is applied using high-pressure and vacuum-pressure in the impregnation process in KLC's modern, automated treatment facility.
4. Cut End Treatment : All cut ends surfaces are to be double coated and **sealed before fixing. With a alkyd (oil based) primer**
5. **MicroPro preservative solution has benefits of reduced corrosivity.** Use Hot Dip Galvanised Fasteners & Stainless Steel fasteners, MicroPro may be placed in direct contact with Aluminium Building products in interior applications, and above ground exterior applications that provide proper water drainage
6. MicroPro® is the first wood treatment process to be EPP (Environmentally Preferable Product) certified by Scientific Certification Systems based on a life cycle assessment.
7. MicroPro® is environmentally sustainable, is low leaching, low VOC emissions and the award of the GREENGUARD Children and Schools' Certification from the Greenguard® Environmental Institute.
8. MicroPro® Wood Treatment Technology has received a Global GreenTag GreenRate™ Level A this declaration is 'Fit-for-Purpose' and confirmed for Green Building compliance.
9. MicroPro® Wood Treatment Technology has received GreenTag PhD™ proving claims that MicroPro® is safe for human health (and ecosystems).

CAD REF : KLC CF20 BB20-25 - DOOR DETAILS.dwg
DATE : 05/11/2018

Naturally Better
www.klc.co.nz

DETAILS MAY BE SUBJECT TO CHANGE WITHOUT NOTICE
COPYRIGHT © "KLC LIMITED" ALL RIGHTS ASSERTED

TYPE Generation II H3.2 Exterior Cladding Systems
Bevel Back Weatherboard - Cavity Fix

NAME Door Sill Detail - Aluminium Joinery

CODEMARK™ AQ-020216-CMNZ

DRAWING SCALE	ISSUE DATE
1:2 @ A4	26/10/2018

DRAWING No	REVISION
KLC CF20 BB21	1

LEGEND:

- (PEF) PEF ROD BACKING: Foam backing rod with sealant to cavity in door perimeter that forms a waterproof air-seal. (Sealant 2:1 Ratio)
- (AJ) ALUMINIUM JOINERY: Selected double glazed aluminium joinery
- (IL) INTERNAL LINING: Selected Internal Lining
- (BW) BUILDING WRAP: Flexible Wall Underlay, As per NZBC E2/AS1 - Table 23, In extra high wind zones, Ridgid Underlay required (9.1.7.2 E2/AS1)
- (CC) CAVITY CLOSURE: Cavity closure strip, positioned to give a 15mm Min drip edge to cladding
- (CB) CAVITY BATTEN: 45x20 KLC Generation II, MicroPro H3.2 FJ Cavity Batten to form a 20mm cavity
- (FT1) FLASHING TAPE: Flashing tape over wrap 70mm (50 min) turn-down required in corners only. Refer to Fig. 72 of NZBC E2/AS1
- (FT2) FLEXIBLE FLASHING TAPE: Flexible flashing tape lapped over aluminium head flashing or 2nd layer of Building Wrap to taped joint or top of frame
- (TF) TIMBER FRAME: H1.2 min treated timber framing
- (WB) WEATHER BOARD: KLC Generation II, MicroPro H3.2 Bevel Back Weatherboard. Profile to NZS 3617
- (IN) INSULATION: Selected Insulation
- (HF) HEAD FLASHING: Aluminium head flashing with minimum 15 degree fall and optional hemmed edges as per table 7 E2/AS1
- (TP) TIMBER PACKER: MicroPro H3.2 Treated Packer
- (SS) SILL SCRIBER: MicroPro H3.2, Horizontal batten under window as necessary to suit profile
- (DL) DOOR LINER: As Specified (We Recommend MicroPro H3.2 Liners & Sills)
- (WH) WEATHERHEAD: MicroPro H3.2, Horizontal batten above window as necessary to suit profile, shaped to shed water, sealant to back of sill scriber
- (WZ) WANZ SUPPORT: Provide window support as required by joinery manufacturer
- (TP) TIMBER PACKER: MicroPro H3.2 Treated Packer
- (DS) DOOR SCRIBER: KLC Generation II, MicroPro H3.2 profile cut to fit weatherboard, sealant to back of scriber. 40x18 or 65x18 depending on weatherboard size

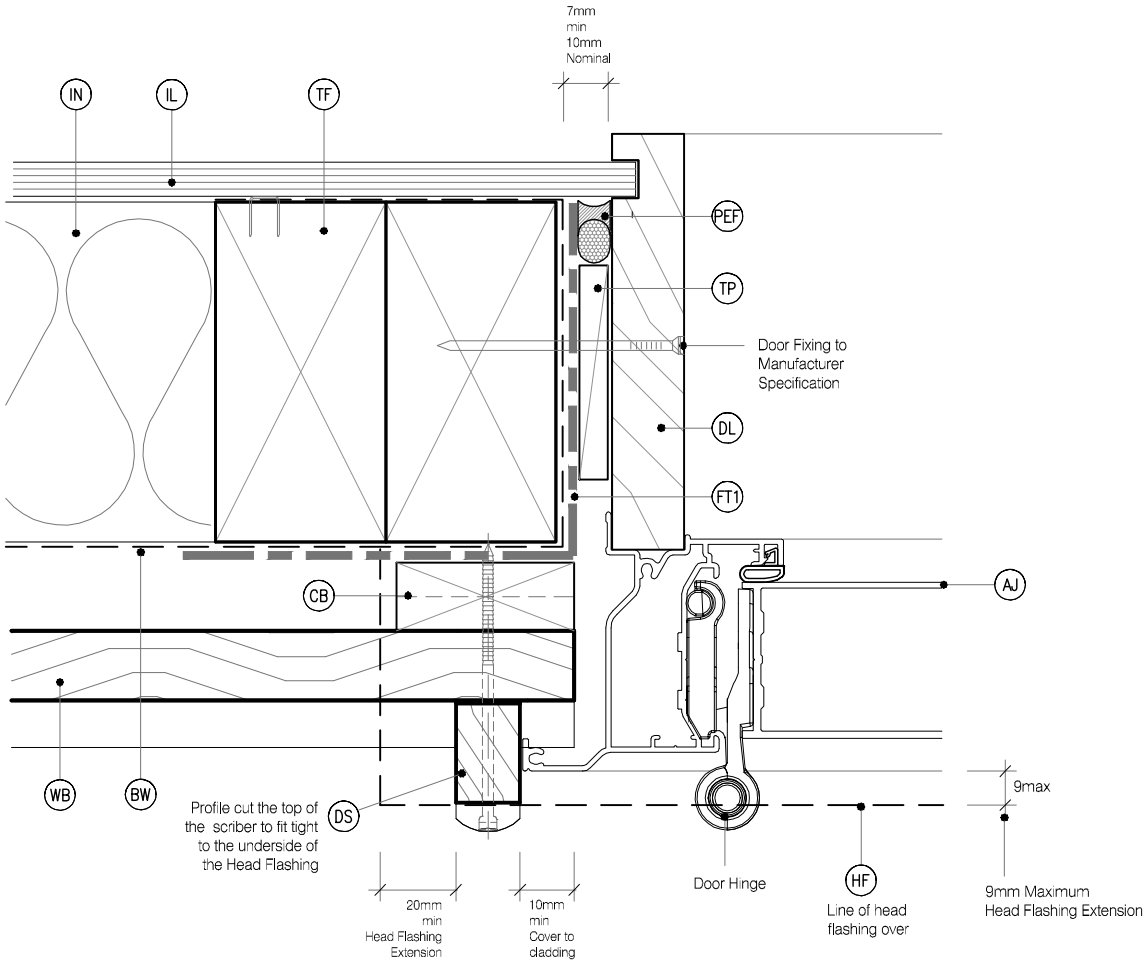

MicoPro® Wood Treatment Technology

1. KLC use the MicroPro Micronized Copper Azole (MCA) based preservative system for their wood products. It accounts for 80% of wood treated in the US for domestic applications
2. Micronized Copper Azole (MCA) preservatives are EPA-approved for use in NZ and AUS to NZS3640:2003 and AS1604.12012
3. MicroPro preservative is applied using high-pressure and vacuum-pressure in the impregnation process in KLC's modern, automated treatment facility.
4. Cut End Treatment : All cut ends surfaces are to be double coated and sealed before fixing. With a alkyd (oil based) primer
5. MicroPro preservative solution has benefits of reduced corrosivity. Use Hot Dip Galvanised Fasteners & Stainless Steel fasteners. MicroPro may be placed in direct contact with Aluminium Building products in interior applications, and above ground exterior applications that provide proper water drainage
6. MicroPro® is the first wood treatment process to be EPP (Environmentally Preferable Product) certified by Scientific Certification Systems based on a life cycle assessment.
7. MicroPro® is environmentally sustainable, is low leaching, low VOC emissions and the award of the GREENGUARD Children and Schools' Certification from the Greenguard® Environmental Institute.
8. MicroPro® Wood Treatment Technology has received a Global GreenTag GreenRate™ Level A this declaration is 'Fit-for-Purpose' and confirmed for Green Building compliance.
9. MicroPro® Wood Treatment Technology has received GreenTag PhD™ proving claims that MicroPro® is safe for human health (and ecosystems).

CAD REF : KLC CF20 BB20-25 - DOOR DETAILS.dwg
DATE : 05/11/2018

Naturally Better

www.klc.co.nz

DETAILS MAY BE SUBJECT TO CHANGE WITHOUT NOTICE
COPYRIGHT © "KLC LIMITED" ALL RIGHTS ASSERTED

TYPE Generation II H3.2 Exterior Cladding Systems
Bevel Back Weatherboard - Cavity Fix

NAME Door Jamb Detail - Aluminium Joinery

CODEMARK™ AQ-020216-CMNZ

DRAWING SCALE	ISSUE DATE
1:2 @ A4	26/10/2018

DRAWING No	REVISION
KLC CF20 BB22	1

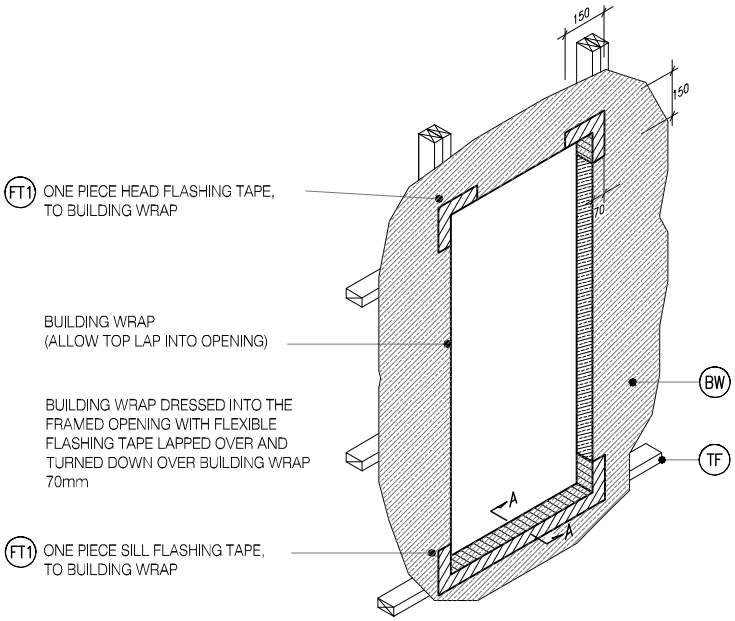

D4 BB23 TYPICAL DOOR OPENING (FLASHING TAPE)

SCALE : N.T.S

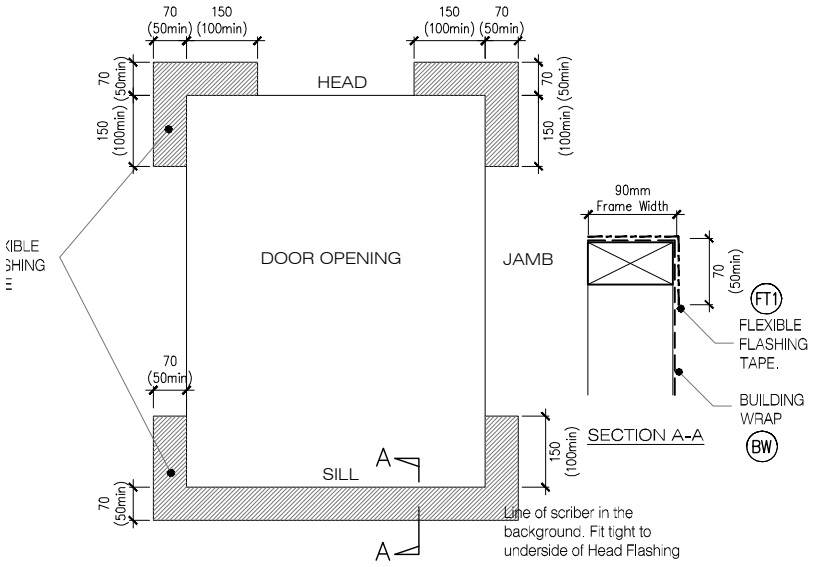

D5 BB23 FLEXIBLE BUILDING WRAP AT OPENING

SCALE : 1 / 5 @ A1, 1 / 10 @ A3

MicoPro® Wood Treatment Technology

1. KLC use the MicroPro Micronized Copper Azole (MCA) based preservative system for their wood products. It accounts for 80% of wood treated in the US for domestic applications
2. Micronized Copper Azole (MCA) preservatives are EPA-approved for use in NZ and AUS to NZS3640:2003 and AS1604.12012
3. MicroPro preservative is applied using high-pressure and vacuum-pressure in the impregnation process in KLC's modern, automated treatment facility.
4. Cut End Treatment : All cut ends surfaces are to be double coated and **sealed before fixing. With a alkyd (oil based) primer**
5. **MicroPro preservative solution has benefits of reduced corrosivity.** Use Hot Dip Galvanised Fasteners & Stainless Steel fasteners, MicroPro may be placed in direct contact with Aluminium Building products in interior applications, and above ground exterior applications that provide proper water drainage
6. MicroPro® is the first wood treatment process to be EPP (Environmentally Preferable Product) certified by Scientific Certification Systems based on a life cycle assessment.
7. MicroPro® is environmentally sustainable, is low leaching, low VOC emissions and the award of the GREENGUARD Children and Schools' Certification from the Greenguard® Environmental Institute.
8. MicroPro® Wood Treatment Technology has received a Global GreenTag GreenRate™ Level A this declaration is 'Fit-for-Purpose' and confirmed for Green Building compliance.
9. MicroPro® Wood Treatment Technology has received GreenTag PhD™ proving claims that MicroPro® is safe for human health (and ecosystems).

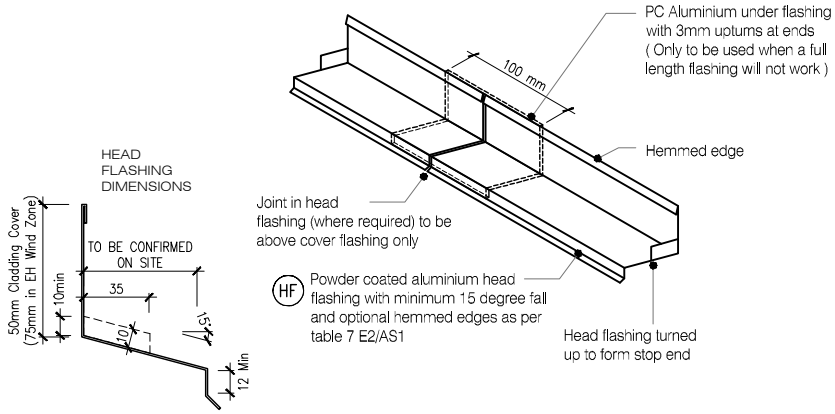

ONE PIECE PC ALUMINIUM HEAD FLASHING 15° SLOPE WITH 10mm min COVER TO JOINERY EXTEND 30mm min EITHER SIDE OF JOINERY WITH STOP ENDS

D6 BB23 TYPICAL HEAD & FLASHING JOINT

SCALE : 1 / 2 @ A1, 1 / 4 @ A3

CAD REF : KLC CF20 BB20-25 - DOOR DETAILS.dwg
DATE : 05/11/2018

Naturally Better

www.klc.co.nz

DETAILS MAY BE SUBJECT TO CHANGE WITHOUT NOTICE
COPYRIGHT © "KLC LIMITED" ALL RIGHTS ASSERTED

TYPE Generation II H3.2 Exterior Cladding Systems
Bevel Back Weatherboard - Cavity Fix

NAME Door Flashing Details - Aluminium Joinery

CODEMARK™ AQ-020216-CMNZ

DRAWING SCALE	ISSUE DATE
1:4 @ A4	26/10/2018

DRAWING No	REVISION
KLC CF20 BB23	1

LEGEND:

- (PEF) PEF ROD BACKING: Foam backing rod with sealant to cavity in Window perimeter that forms a waterproof air-seal. (Sealant 2:1 Ratio)
- (AJ) ALUMINIUM JOINERY: Selected double glazed aluminium joinery
- (IL) INTERNAL LINING: Selected Internal Lining
- (BW) BUILDING WRAP: Flexible Wall Underlay, As per NZBC E2/AS1 - Table 23, In extra high wind zones, Ridgid Underlay required (9.1.7.2 E2/AS1)
- (CC) CAVITY CLOSURE: Cavity closure strip, positioned to give a 15mm Min drip edge to cladding
- (CB) CAVITY BATTEN: 45x20 KLC Generation II, MicroPro H3.2 FJ Cavity Batten to form a 20mm cavity
- (FT1) FLASHING TAPE: Flashing tape over wrap 70mm (50 min) turn-down required in corners only. Refer to Fig. 72 of NZBC E2/AS1
- (FT2) FLEXIBLE FLASHING TAPE: Flexible flashing tape lapped over aluminium head flashing or 2nd layer of Building Wrap to taped joint or top of frame
- (TF) TIMBER FRAME: H1.2 min treated timber framing
- (WB) WEATHER BOARD: KLC Generation II, MicroPro H3.2 Bevel Back Weatherboard. Profile to NZS 3617
- (IN) INSULATION: Selected Insulation
- (HF) HEAD FLASHING: Aluminium head flashing with minimum 15 degree fall and optional hemmed edges as per table 7 E2/AS1
- (TP) TIMBER PACKER: MicroPro H3.2 Treated Packer
- (SS) SILL SCRIBER: MicroPro H3.2, Horizontal batten under window as necessary to suit profile, sealant to back of sill scriber
- (WL) WINDOW LINER: As Specified (We Recommend MicroPro H3.2 Liners & Sills)
- (WH) WEATHERHEAD: MicroPro H3.2, Horizontal batten above window as necessary to suit profile, shaped to shed water, sealant to back of head scriber
- (WZ) WANZ SUPPORT: Provide window support as required by joinery manufacturer
- (WS) WINDOW SCRIBER: KLC Generation II, MicroPro H3.2 profile cut to fit weatherboard, sealant to back of scriber and 75 x 3.15mm Galvanised nail in 3mm predrilled hole. 40x18 or 65x18 depending on weatherboard size

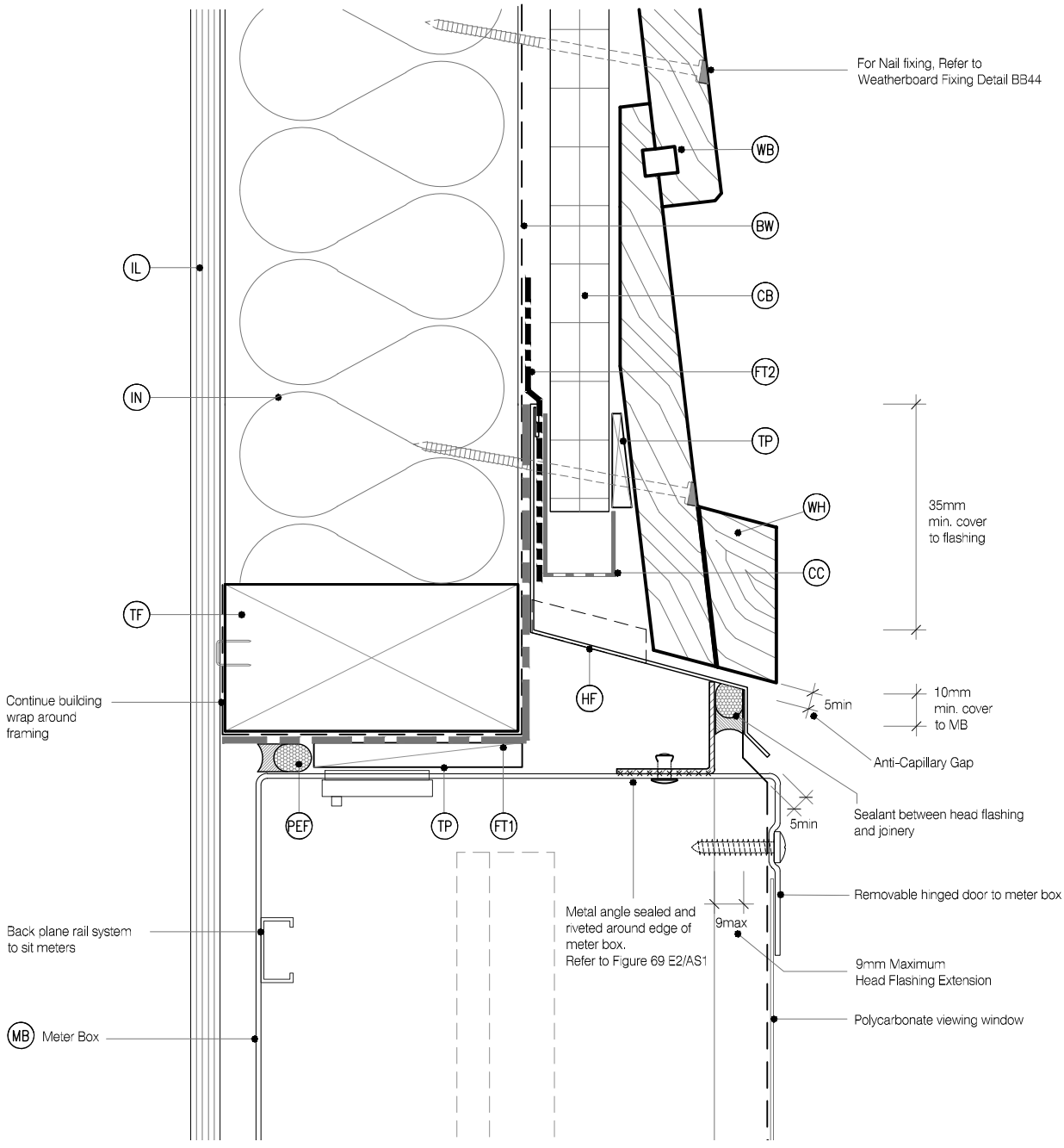

MicoPro® Wood Treatment Technology

1. KLC use the MicroPro Micronized Copper Azole (MCA) based preservative system for their wood products. It accounts for 80% of wood treated in the US for domestic applications
2. Micronized Copper Azole (MCA) preservatives are EPA-approved for use in NZ and AUS to NZS3640:2003 and AS1604.12012
3. MicroPro preservative is applied using high-pressure and vacuum-pressure in the impregnation process in KLC's modern, automated treatment facility.
4. Cut End Treatment : All cut ends surfaces are to be double coated and sealed before fixing. With a alkyd (oil based) primer
5. MicroPro preservative solution has benefits of reduced corrosivity. Use Hot Dip Galvanised Fasteners & Stainless Steel fasteners. MicroPro may be placed in direct contact with Aluminium Building products in interior applications, and above ground exterior applications that provide proper water drainage
6. MicroPro® is the first wood treatment process to be EPP (Environmentally Preferable Product) certified by Scientific Certification Systems based on a life cycle assessment.
7. MicroPro® is environmentally sustainable, is low leaching, low VOC emissions and the award of the GREENGUARD Children and Schools' Certification from the Greenguard® Environmental Institute.
8. MicroPro® Wood Treatment Technology has received a Global GreenTag GreenRate™ Level A this declaration is 'Fit-for-Purpose' and confirmed for Green Building compliance.
9. MicroPro® Wood Treatment Technology has received GreenTag PhD™ proving claims that MicroPro® is safe for human health (and ecosystems).

KLC Naturally Better

www.klc.co.nz

DETAILS MAY BE SUBJECT TO CHANGE WITHOUT NOTICE
COPYRIGHT © "KLC LIMITED" ALL RIGHTS ASSERTED

TYPE Generation II H3.2 Exterior Cladding Systems
Bevel Back Weatherboard - Cavity Fix

NAME Meter Box - Head Detail

CODEMARK™ AQ-020216-CMNZ

DRAWING SCALE	ISSUE DATE
1:2 @ A4	26/10/2018

DRAWING No	REVISION
KLC CF20 BB30	1

CAD REF : KLC CF20 BB30-35 - METER BOX.dwg
DATE : 05/11/2018

LEGEND:

- (PEF) PEF ROD BACKING: Foam backing rod with sealant to cavity in Window perimeter that forms a waterproof air-seal. (Sealant 2:1 Ratio)
- (AJ) ALUMINIUM JOINERY: Selected double glazed aluminium joinery
- (IL) INTERNAL LINING: Selected Internal Lining
- (BW) BUILDING WRAP: Flexible Wall Underlay, As per NZBC E2/AS1 - Table 23, In extra high wind zones, Ridgid Underlay required (9.1.7.2 E2/AS1)
- (CC) CAVITY CLOSURE: Cavity closure strip, positioned to give a 15mm Min drip edge to cladding
- (CB) CAVITY BATTEN: 45x20 KLC Generation II, MicroPro H3.2 FJ Cavity Batten to form a 20mm cavity
- (FT1) FLASHING TAPE: Flashing tape over wrap 70mm (50 min) turn-down required in corners only. Refer to Fig. 72 of NZBC E2/AS1
- (FT2) FLEXIBLE FLASHING TAPE: Flexible flashing tape lapped over aluminium head flashing or 2nd layer of Building Wrap to taped joint or top of frame
- (TF) TIMBER FRAME: H1.2 min treated timber framing
- (WB) WEATHER BOARD: KLC Generation II, MicroPro H3.2 Bevel Back Weatherboard. Profile to NZS 3617
- (IN) INSULATION: Selected Insulation
- (HF) HEAD FLASHING: Aluminium head flashing with minimum 15 degree fall and optional hemmed edges as per table 7 E2/AS1
- (TP) TIMBER PACKER: MicroPro H3.2 Treated Packer
- (SS) SILL SCRIBER: MicroPro H3.2, Horizontal batten under window as necessary to suit profile, sealant to back of sill scriber
- (WL) WINDOW LINER: As Specified (We Recommend MicroPro H3.2 Liners & Sills)
- (WH) WEATHERHEAD: MicroPro H3.2, Horizontal batten above window as necessary to suit profile, shaped to shed water, sealant to back of head scriber
- (WZ) WANZ SUPPORT: Provide window support as required by joinery manufacturer
- (WS) WINDOW SCRIBER: KLC Generation II, MicroPro H3.2 profile cut to fit weatherboard, sealant to back of scriber and 75 x 3.15mm Galvanised nail in 3mm predrilled hole. 40x18 or 65x18 depending on weatherboard size

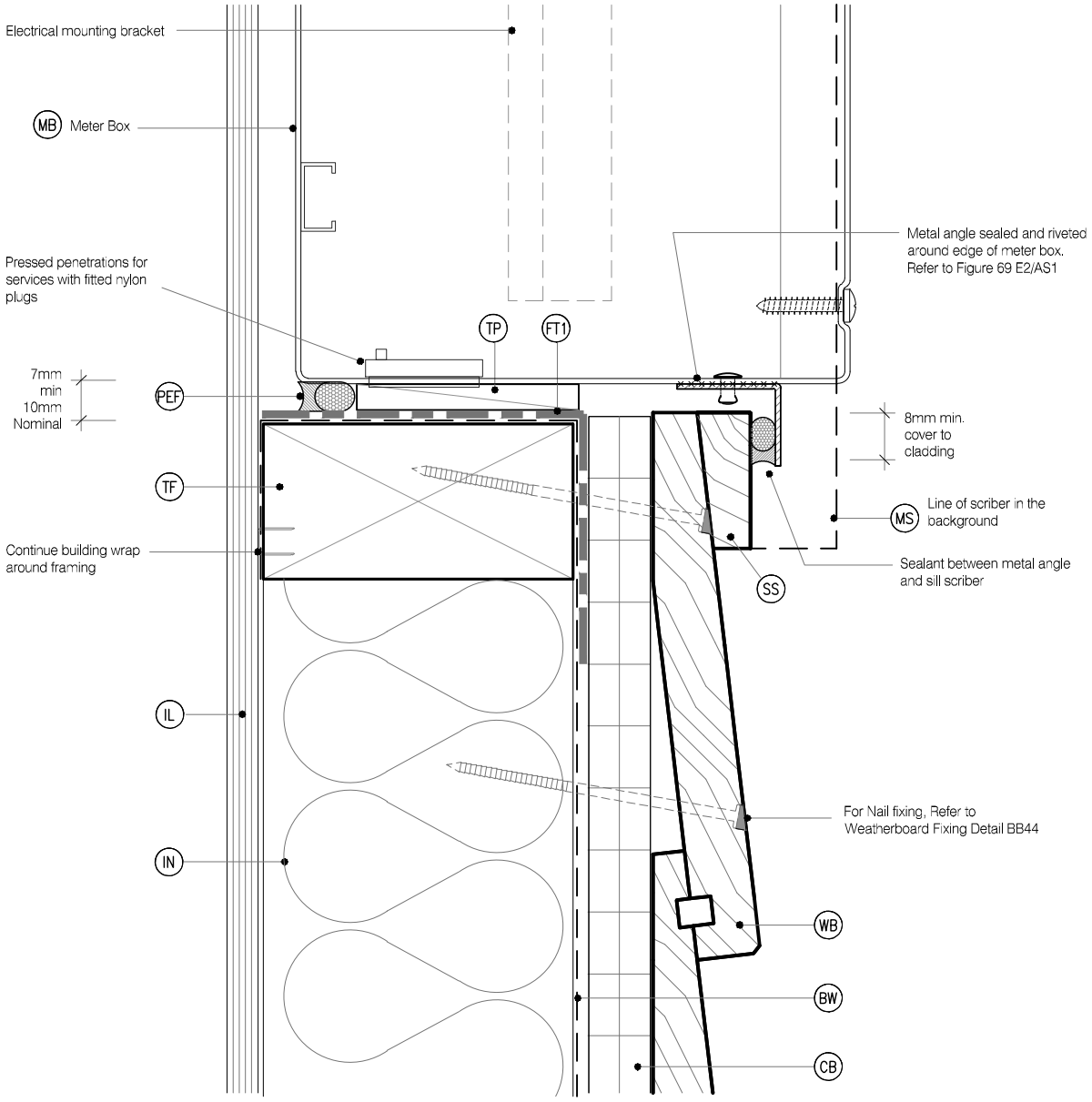

MicoPro® Wood Treatment Technology

1. KLC use the MicroPro Micronized Copper Azole (MCA) based preservative system for their wood products. It accounts for 80% of wood treated in the US for domestic applications
2. Micronized Copper Azole (MCA) preservatives are EPA-approved for use in NZ and AUS to NZS3640:2003 and AS1604.12012
3. MicroPro preservative is applied using high-pressure and vacuum-pressure in the impregnation process in KLC's modern, automated treatment facility.
4. Cut End Treatment : All cut ends surfaces are to be double coated and sealed before fixing. With a alkyd (oil based) primer
5. MicroPro preservative solution has benefits of reduced corrosivity. Use Hot Dip Galvanised Fasteners & Stainless Steel fasteners. MicroPro may be placed in direct contact with Aluminium Building products in interior applications, and above ground exterior applications that provide proper water drainage
6. MicroPro® is the first wood treatment process to be EPP (Environmentally Preferable Product) certified by Scientific Certification Systems based on a life cycle assessment.
7. MicroPro® is environmentally sustainable, is low leaching, low VOC emissions and the award of the GREENGUARD Children and Schools' Certification from the Greenguard® Environmental Institute.
8. MicroPro® Wood Treatment Technology has received a Global GreenTag GreenRate™ Level A this declaration is 'Fit-for-Purpose' and confirmed for Green Building compliance.
9. MicroPro® Wood Treatment Technology has received GreenTag PhD™ proving claims that MicroPro® is safe for human health (and ecosystems).

CAD REF : KLC CF20 BB30-35 - METER BOX.dwg
DATE : 05/11/2018

Naturally Better

www.klc.co.nz

DETAILS MAY BE SUBJECT TO CHANGE WITHOUT NOTICE
COPYRIGHT © "KLC LIMITED" ALL RIGHTS ASSERTED

TYPE Generation II H3.2 Exterior Cladding Systems
Bevel Back Weatherboard - Cavity Fix

NAME Meter Box - Sill Detail

CODEMARK™ AQ-020216-CMNZ

DRAWING SCALE	ISSUE DATE
1:2 @ A4	26/10/2018

DRAWING No	REVISION
KLC CF20 BB31	1

LEGEND:

- (PEF) PEF ROD BACKING: Foam backing rod with sealant to cavity in Window perimeter that forms a waterproof air-seal. (Sealant 2:1 Ratio)
- (AJ) ALUMINIUM JOINERY: Selected double glazed aluminium joinery
- (IL) INTERNAL LINING: Selected Internal Lining
- (BW) BUILDING WRAP: Flexible Wall Underlay, As per NZBC E2/AS1 - Table 23, In extra high wind zones, Ridgid Underlay required (9.1.7.2 E2/AS1)
- (CC) CAVITY CLOSURE: Cavity closure strip, positioned to give a 15mm Min drip edge to cladding
- (CB) CAVITY BATTEN: 45x20 KLC Generation II, MicroPro H3.2 FJ Cavity Batten to form a 20mm cavity
- (FT1) FLASHING TAPE: Flashing tape over wrap 70mm (50 min) turn-down required in corners only. Refer to Fig. 72 of NZBC E2/AS1
- (FT2) FLEXIBLE FLASHING TAPE: Flexible flashing tape lapped over aluminium head flashing or 2nd layer of Building Wrap to taped joint or top of frame
- (TF) TIMBER FRAME: H1.2 min treated timber framing
- (WB) WEATHER BOARD: KLC Generation II, MicroPro H3.2 Bevel Back Weatherboard. Profile to NZS 3617
- (IN) INSULATION: Selected Insulation
- (HF) HEAD FLASHING: Aluminium head flashing with minimum 15 degree fall and optional hemmed edges as per table 7 E2/AS1
- (TP) TIMBER PACKER: MicroPro H3.2 Treated Packer
- (SS) SILL SCRIBER: MicroPro H3.2, Horizontal batten under window as necessary to suit profile, sealant to back of sill scriber
- (WL) WINDOW LINER: As Specified (We Recommend MicroPro H3.2 Liners & Sills)
- (WH) WEATHERHEAD: MicroPro H3.2, Horizontal batten above window as necessary to suit profile, shaped to shed water, sealant to back of head scriber
- (WZ) WANZ SUPPORT: Provide window support as required by joinery manufacturer
- (WS) WINDOW SCRIBER: KLC Generation II, MicroPro H3.2 profile cut to fit weatherboard, sealant to back of scriber and 75 x 3.15mm Galvanised nail in 3mm predrilled hole. 40x18 or 65x18 depending on weatherboard size

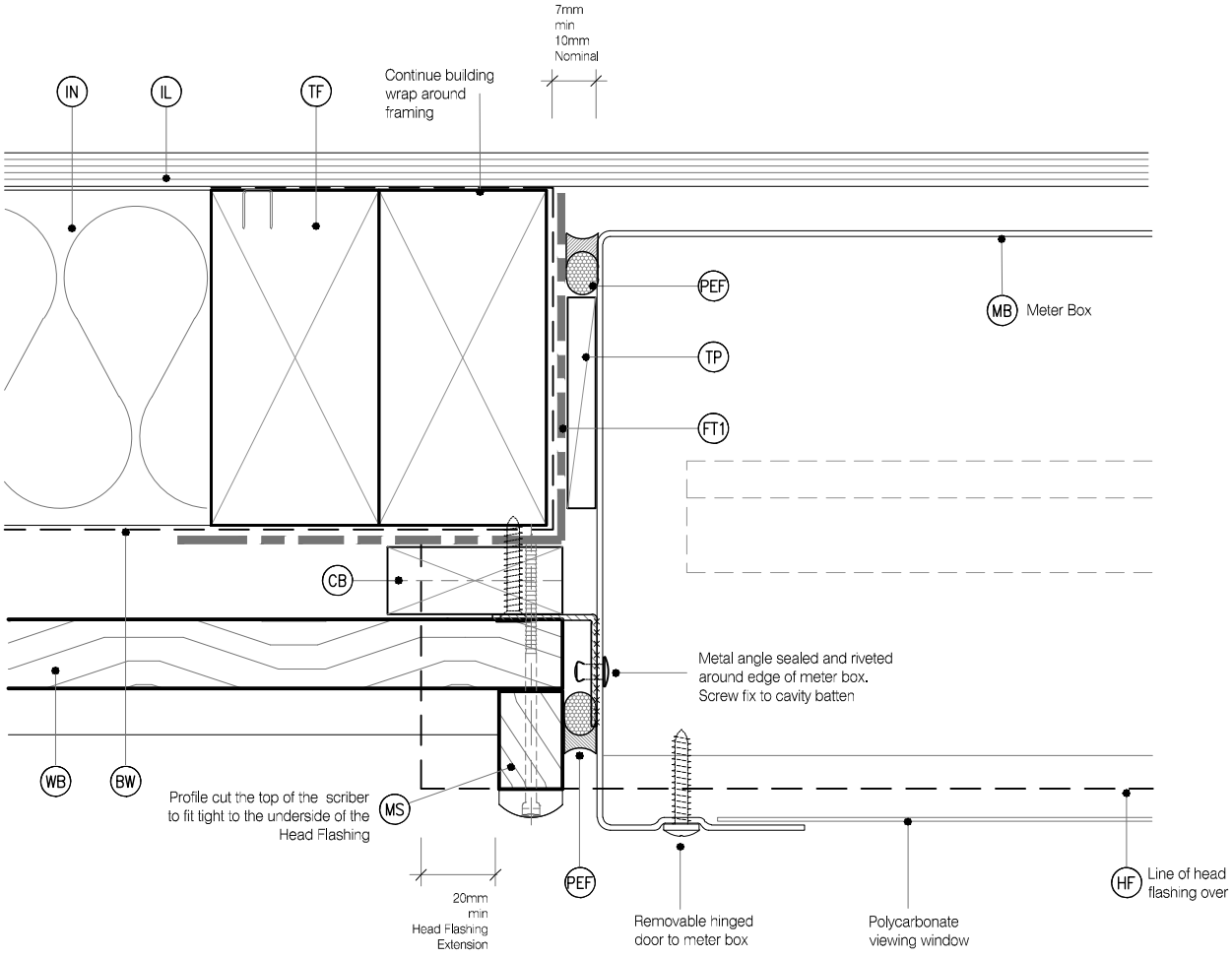

MicoPro® Wood Treatment Technology

1. KLC use the MicroPro Micronized Copper Azole (MCA) based preservative system for their wood products. It accounts for 80% of wood treated in the US for domestic applications
2. Micronized Copper Azole (MCA) preservatives are EPA-approved for use in NZ and AUS to NZS3640:2003 and AS1604.12012
3. MicroPro preservative is applied using high-pressure and vacuum-pressure in the impregnation process in KLC's modern, automated treatment facility.
4. Cut End Treatment : All cut ends surfaces are to be double coated and sealed before fixing. With a alkyd (oil based) primer
5. MicroPro preservative solution has benefits of reduced corrosivity. Use Hot Dip Galvanised Fasteners & Stainless Steel fasteners. MicroPro may be placed in direct contact with Aluminium Building products in interior applications, and above ground exterior applications that provide proper water drainage
6. MicroPro® is the first wood treatment process to be EPP (Environmentally Preferable Product) certified by Scientific Certification Systems based on a life cycle assessment.
7. MicroPro® is environmentally sustainable, is low leaching, low VOC emissions and the award of the GREENGUARD Children and Schools' Certification from the Greenguard® Environmental Institute.
8. MicroPro® Wood Treatment Technology has received a Global GreenTag GreenRate™ Level A this declaration is 'Fit-for-Purpose' and confirmed for Green Building compliance.
9. MicroPro® Wood Treatment Technology has received GreenTag PhD™ proving claims that MicroPro® is safe for human health (and ecosystems).

Naturally Better

www.klc.co.nz

DETAILS MAY BE SUBJECT TO CHANGE WITHOUT NOTICE
COPYRIGHT © "KLC LIMITED" ALL RIGHTS ASSERTED

TYPE Generation II H3.2 Exterior Cladding Systems
Bevel Back Weatherboard - Cavity Fix

NAME Meter Box - Jamb Detail

CODEMARK™ AQ-020216-CMNZ

DRAWING SCALE	ISSUE DATE
1:2 @ A4	26/10/2018

DRAWING No	REVISION
KLC CF20 BB32	1

CAD REF : KLC CF20 BB30-35 - METER BOX.dwg
DATE : 05/11/2018

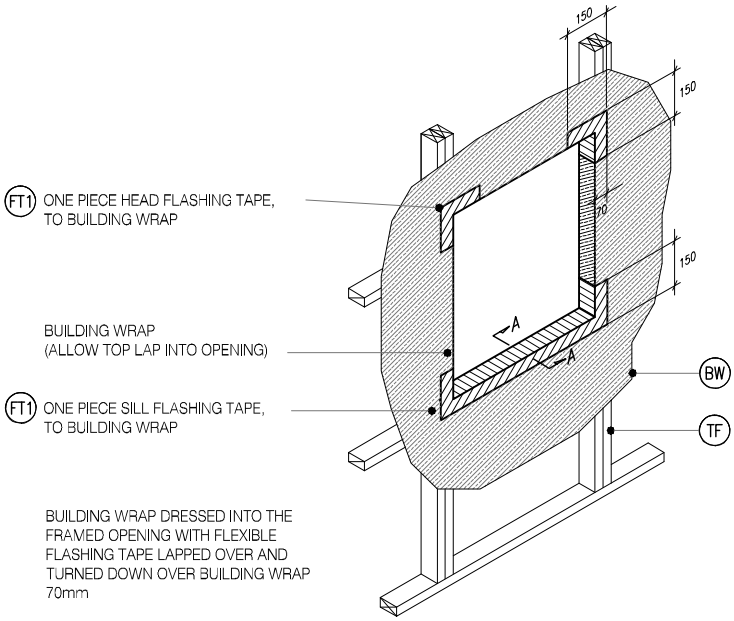

FT1 ONE PIECE HEAD FLASHING TAPE, TO BUILDING WRAP

BUILDING WRAP (ALLOW TOP LAP INTO OPENING)

FT1 ONE PIECE SILL FLASHING TAPE, TO BUILDING WRAP

BUILDING WRAP DRESSED INTO THE FRAMED OPENING WITH FLEXIBLE FLASHING TAPE LAPPED OVER AND TURNED DOWN OVER BUILDING WRAP 70mm

M4 BB33 TYPICAL METER BOX OPENING (FLASHING TAPE

SCALE : N.T.S

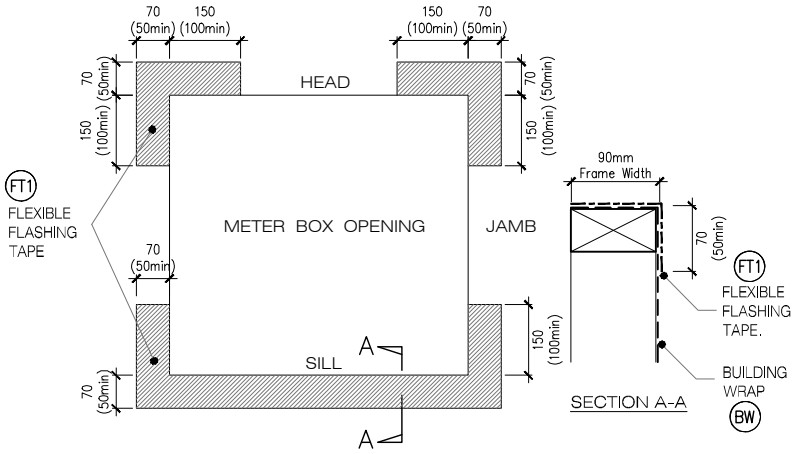

M5 BB33 FLEXIBLE BUILDING WRAP AT OPENING

SCALE : 1 / 5 @ A1, 1 / 10 @ A3

MicoPro® Wood Treatment Technology

1. KLC use the MicroPro Micronized Copper Azole (MCA) based preservative system for their wood products. It accounts for 80% of wood treated in the US for domestic applications
2. Micronized Copper Azole (MCA) preservatives are EPA-approved for use in NZ and AUS to NZS3640:2003 and AS1604.12012
3. MicroPro preservative is applied using high-pressure and vacuum-pressure in the impregnation process in KLC's modern, automated treatment facility.
4. Cut End Treatment : All cut ends surfaces are to be double coated and **sealed before fixing. With a alkyd (oil based) primer**
5. **MicroPro preservative solution has benefits of reduced corrosivity.** Use Hot Dip Galvanised Fasteners & Stainless Steel fasteners, MicroPro may be placed in direct contact with Aluminium Building products in interior applications, and above ground exterior applications that provide proper water drainage
6. MicroPro® is the first wood treatment process to be EPP (Environmentally Preferable Product) certified by Scientific Certification Systems based on a life cycle assessment.
7. MicroPro® is environmentally sustainable, is low leaching, low VOC emissions and the award of the GREENGUARD Children and Schools' Certification from the Greenguard® Environmental Institute.
8. MicroPro® Wood Treatment Technology has received a Global GreenTag GreenRate™ Level A this declaration is 'Fit-for-Purpose' and confirmed for Green Building compliance.
9. MicroPro® Wood Treatment Technology has received GreenTag PhD™ proving claims that MicroPro® is safe for human health (and ecosystems).

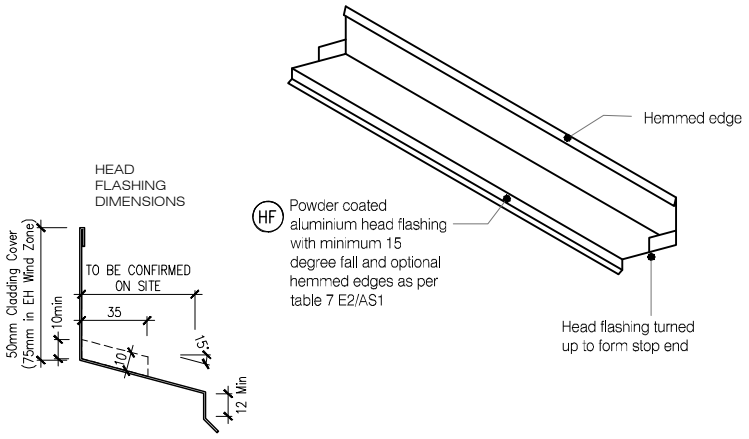

ONE PIECE PC ALUMINIUM HEAD FLASHING 15° SLOPE WITH 10mm min COVER TO JOINERY EXTEND 30mm min EITHER SIDE OF JOINERY WITH STOP ENDS

M6 BB33 TYPICAL HEAD & FLASHING JOINT

SCALE : 1 / 2 @ A1, 1 / 4 @ A3

CAD REF : KLC CF20 BB30-35 - METER BOX.dwg
DATE : 05/11/2018

Naturally Better

www.klc.co.nz

DETAILS MAY BE SUBJECT TO CHANGE WITHOUT NOTICE
COPYRIGHT © "KLC LIMITED" ALL RIGHTS ASSERTED

TYPE Generation II H3.2 Exterior Cladding Systems
Bevel Back Weatherboard - Cavity Fix

NAME Meter Box - Flashing Details

CODEMARK™ AQ-020216-CMNZ

DRAWING SCALE	ISSUE DATE
1:4 @ A4	26/10/2018

DRAWING No	REVISION
KLC CF20 BB33	1

LEGEND:

- (CB) CAVITY BATTEN: 45x20 KLC Generation II, MicroPro H3.2 FJ Cavity Batten to form a 20mm cavity
- (IL) INTERNAL LINING: Selected Internal Lining
- (BW) BUILDING WRAP: Flexible Wall Underlay, As per NZBC E2/AS1 - Table 23, In extra high wind zones, Ridgid Underlay required (9.1.7.2 E2/AS1)
- (CS) CORNER SOAKER: With 15mm Min cover over weatherboards
- (FT3) FLEXIBLE FLASHING TAPE: Flexible flashing tape lapped into corner
- (TF) TIMBER FRAME: H1.2 min treated timber framing
- (WB) WEATHER BOARD: KLC Generation II, MicroPro H3.2 Bevel Back Weatherboard. Profile to NZS 3617
- (IN) INSULATION: Selected Insulation
- (CF) CORNER FLASHING: Aluminium, PVC or Stainless Steel corner flashing. Refer NZBC E2/AS1 4.3
  50x50 Hem or Hook to Flashing Edges
  75x75 NO, Hem or Hook Required
  EXTRA HIGH WIND ZONE
  100x100 Hem or Hook to Flashing Edges,
  Refer NZBC E2/AS1 4.5.1

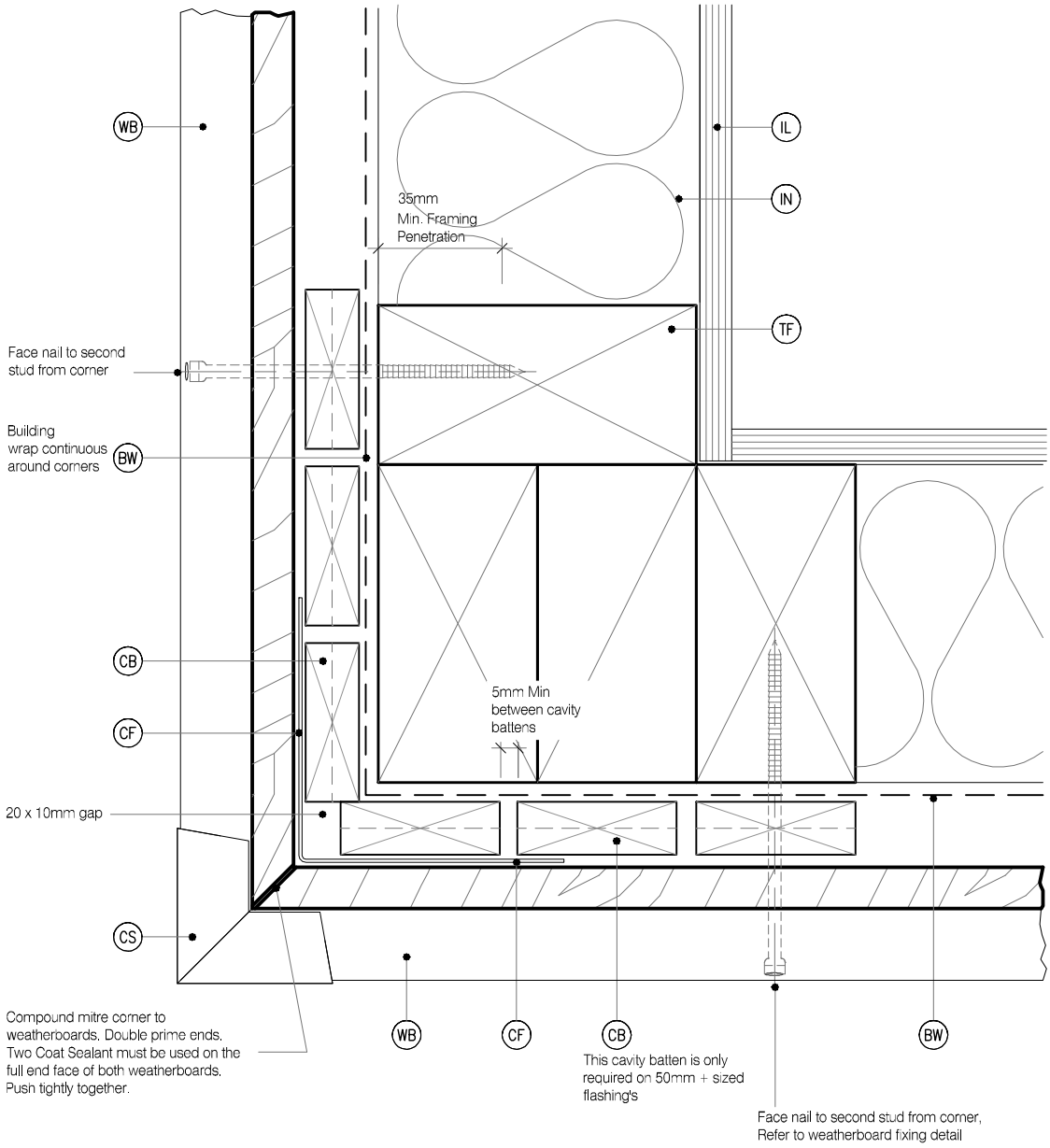

MicoPro® Wood Treatment Technology

1. KLC use the MicroPro Micronized Copper Azole (MCA) based preservative system for their wood products. It accounts for 80% of wood treated in the US for domestic applications
2. Micronized Copper Azole (MCA) preservatives are EPA-approved for use in NZ and AUS to NZS3640:2003 and AS1604.12012
3. MicroPro preservative is applied using high-pressure and vacuum-pressure in the impregnation process in KLC's modern, automated treatment facility.
4. Cut End Treatment : All cut ends surfaces are to be double coated and sealed before fixing. With a alkyd (oil based) primer
5. MicroPro preservative solution has benefits of reduced corrosivity. Use Hot Dip Galvanised Fasteners & Stainless Steel fasteners. MicroPro may be placed in direct contact with Aluminium Building products in interior applications, and above ground exterior applications that provide proper water drainage
6. MicroPro® is the first wood treatment process to be EPP (Environmentally Preferable Product) certified by Scientific Certification Systems based on a life cycle assessment.
7. MicroPro® is environmentally sustainable, is low leaching, low VOC emissions and the award of the GREENGUARD Children and Schools' Certification from the Greenguard® Environmental Institute.
8. MicroPro® Wood Treatment Technology has received a Global GreenTag GreenRate™ Level A this declaration is 'Fit-for-Purpose' and confirmed for Green Building compliance.
9. MicroPro® Wood Treatment Technology has received GreenTag PhD™ proving claims that MicroPro® is safe for human health (and ecosystems).

CAD REF : KLC CF20 BB40-46 - GENERAL DETAILS 01.dwg
DATE : 05/11/2018

Naturally Better

www.klc.co.nz

DETAILS MAY BE SUBJECT
TO CHANGE WITHOUT NOTICE
COPYRIGHT © "KLC LIMITED" ALL RIGHTS ASSERTED

TYPE Generation II H3.2 Exterior Cladding Systems
Bevel Back Weatherboard - Cavity Fix

NAME External Corner Soaker

CODEMARK™ AQ-020216-CMNZ

DRAWING SCALE	ISSUE DATE
1:2 @ A4	26/10/2018

DRAWING No	REVISION
KLC CF20 BB40	1

LEGEND:

- (CB) CAVITY BATTEN: 45x20 KLC Generation II, MicroPro H3.2 FJ Cavity Batten to form a 20mm cavity
- (IL) INTERNAL LINING: Selected Internal Lining
- (BW) BUILDING WRAP: Flexible Wall Underlay, As per NZBC E2/AS1 - Table 23, In extra high wind zones, Ridgid Underlay required (9.1.7.2 E2/AS1)
- (CS) CORNER SOAKER: With 15mm Min cover over weatherboards
- (FT3) FLEXIBLE FLASHING TAPE: Flexible flashing tape lapped into corner
- (TF) TIMBER FRAME: H1.2 min treated timber framing
- (WB) WEATHER BOARD: KLC Generation II, MicroPro H3.2 Bevel Back Weatherboard. Profile to NZS 3617
- (IN) INSULATION: Selected Insulation
- (CF) CORNER FLASHING: Aluminium, PVC or Stainless Steel corner flashing. Refer NZBC E2/AS1 4.3
  50x50 Hem or Hook to Flashing Edges
  75x75 NO, Hem or Hook Required
  EXTRA HIGH WIND ZONE
  100x100 Hem or Hook to Flashing Edges,
  Refer NZBC E2/AS1 4.5.1

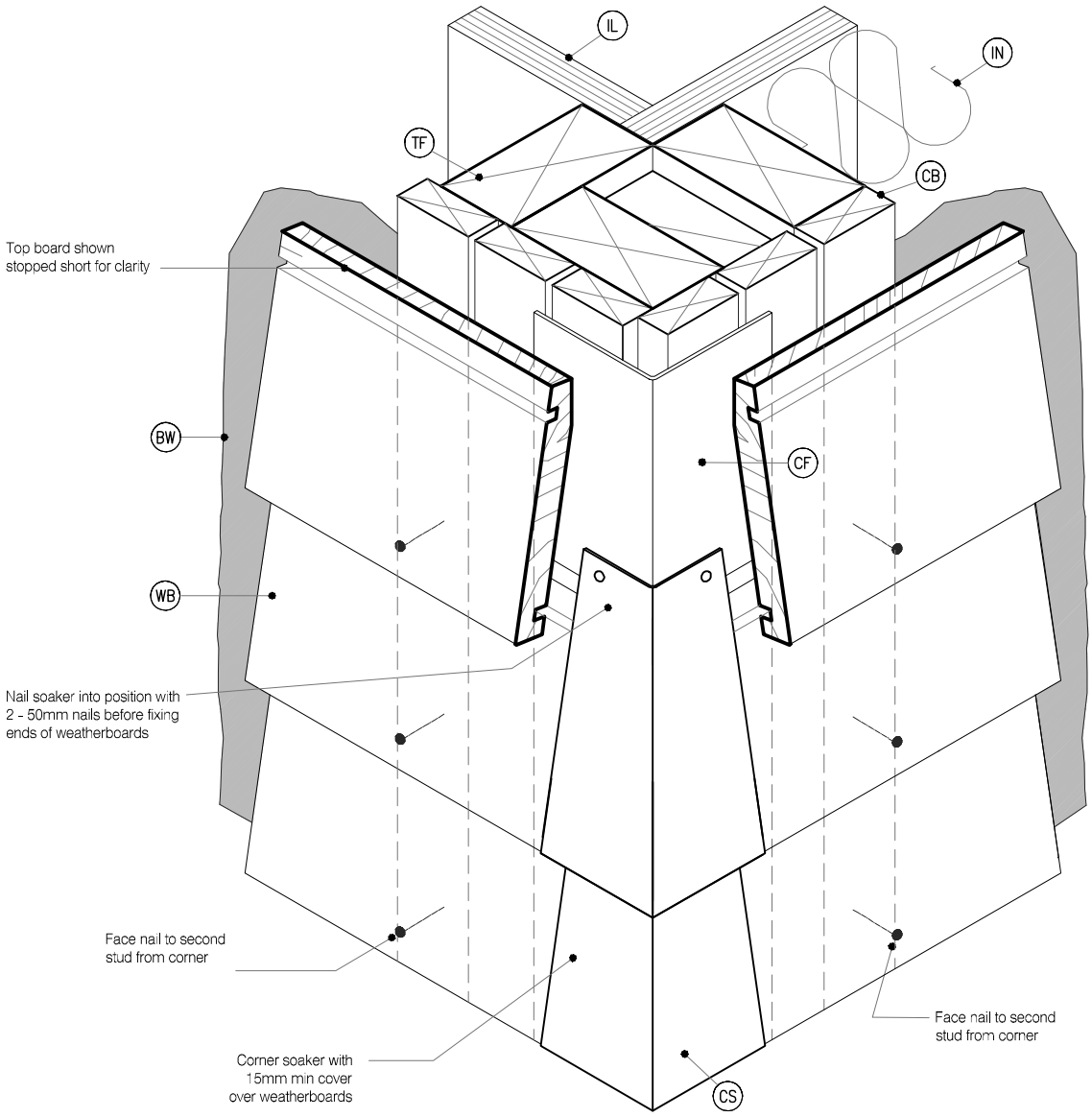

Soaker material	Nail material
Copper	Copper or phosphor bronze
Aluminium	Hot dip galvanised
Stainless steel	Stainless steel

MicoPro® Wood Treatment Technology

1. KLC use the MicroPro Micronized Copper Azole (MCA) based preservative system for their wood products. It accounts for 80% of wood treated in the US for domestic applications
2. Micronized Copper Azole (MCA) preservatives are EPA-approved for use in NZ and AUS to NZS3640:2003 and AS1604.12012
3. MicroPro preservative is applied using high-pressure and vacuum-pressure in the impregnation process in KLC's modern, automated treatment facility.
4. Cut End Treatment : All cut ends surfaces are to be double coated and sealed before fixing. With a alkyd (oil based) primer
5. MicroPro preservative solution has benefits of reduced corrosivity. Use Hot Dip Galvanised Fasteners & Stainless Steel fasteners. MicroPro may be placed in direct contact with Aluminium Building products in interior applications, and above ground exterior applications that provide proper water drainage
6. MicroPro® is the first wood treatment process to be EPP (Environmentally Preferable Product) certified by Scientific Certification Systems based on a life cycle assessment.
7. MicroPro® is environmentally sustainable, is low leaching, low VOC emissions and the award of the GREENGUARD Children and Schools' Certification from the Greenguard® Environmental Institute.
8. MicroPro® Wood Treatment Technology has received a Global GreenTag GreenRate™ Level A this declaration is 'Fit-for-Purpose' and confirmed for Green Building compliance.
9. MicroPro® Wood Treatment Technology has received GreenTag PhD™ proving claims that MicroPro® is safe for human health (and ecosystems).

CAD REF : KLC CF20 BB40-46 - GENERAL DETAILS 01.dwg
DATE : 05/11/2018

Naturally Better
www.klc.co.nz

DETAILS MAY BE SUBJECT TO CHANGE WITHOUT NOTICE
COPYRIGHT © "KLC LIMITED" ALL RIGHTS ASSERTED

TYPE Generation II H3.2 Exterior Cladding Systems
Bevel Back Weatherboard - Cavity Fix

NAME 3D - External Corner Soaker

CODEMARK™ AQ-020216-CMNZ

DRAWING SCALE	ISSUE DATE
1:2 @ A4	26/10/2018

DRAWING No	REVISION
KLC CF20 BB41	1

LEGEND :

- (CB) CAVITY BATTEN: 45x20 KLC Generation II, MicroPro H3.2 FJ Cavity Batten to form a 20mm cavity
- (IL) INTERNAL LINING: Selected Internal Lining
- (BW) BUILDING WRAP: Flexible Wall Underlay, As per NZBC E2/AS1 - Table 23, In extra high wind zones, Ridgid Underlay required (9.1.7.2 E2/AS1)
- (CS) CORNER SOAKER: With 15mm Min cover over weatherboards
- (FT3) FLEXIBLE FLASHING TAPE: Flexible flashing tape lapped into corner
- (TF) TIMBER FRAME: H1.2 min treated timber framing
- (WB) WEATHER BOARD: KLC Generation II, MicroPro H3.2 Bevel Back Weatherboard. Profile to NZS 3617
- (IN) INSULATION: Selected Insulation
- (CF) CORNER FLASHING: Aluminium, PVC or Stainless Steel corner flashing. Refer NZBC E2/AS1 4.3
  50x50 Hem or Hook to Flashing Edges
  75x75 NO, Hem or Hook Required
  EXTRA HIGH WIND ZONE
  100x100 Hem or Hook to Flashing Edges,
  Refer NZBC E2/AS1 4.5.1

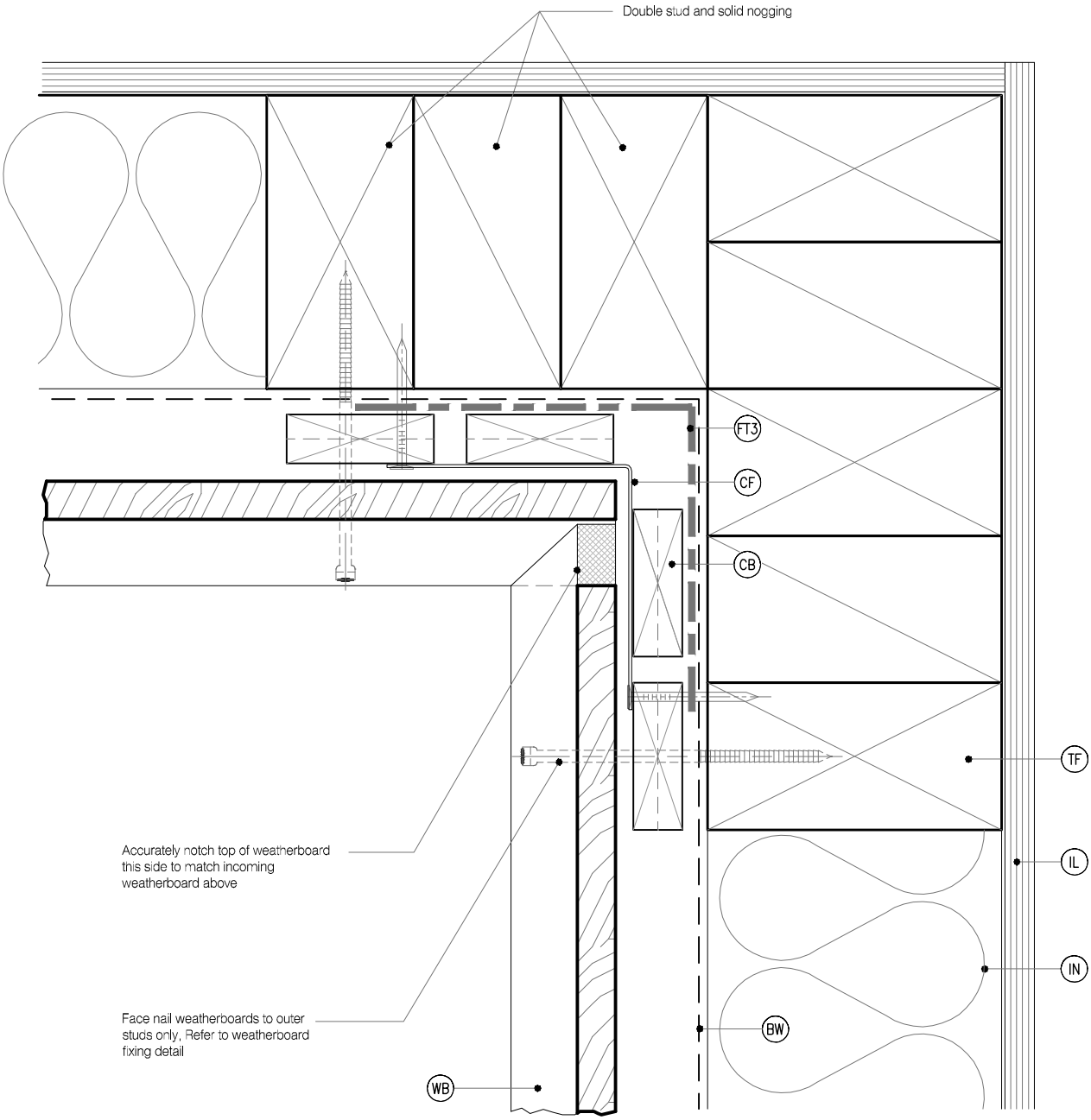

DETAIL NOTES :

1. Flashing tape is recommended due to movement that may occur in corners but it is not required by E2/AS1
2. Aluminium extrusion must not be continuous over solid floor joists.

MicoPro® Wood Treatment Technology

1. KLC use the MicroPro Micronized Copper Azole (MCA) based preservative system for their wood products. It accounts for 80% of wood treated in the US for domestic applications
2. Micronized Copper Azole (MCA) preservatives are EPA-approved for use in NZ and AUS to NZS3640:2003 and AS1604.12012
3. MicroPro preservative is applied using high-pressure and vacuum-pressure in the impregnation process in KLC's modern, automated treatment facility.
4. Cut End Treatment : All cut ends surfaces are to be double coated and sealed before fixing. With a alkyd (oil based) primer
5. MicroPro preservative solution has benefits of reduced corrosivity. Use Hot Dip Galvanised Fasteners & Stainless Steel fasteners. MicroPro may be placed in direct contact with Aluminium Building products in interior applications, and above ground exterior applications that provide proper water drainage
6. MicroPro® is the first wood treatment process to be EPP (Environmentally Preferable Product) certified by Scientific Certification Systems based on a life cycle assessment.
7. MicroPro® is environmentally sustainable, is low leaching, low VOC emissions and the award of the GREENGUARD Children and Schools' Certification from the Greenguard® Environmental Institute.
8. MicroPro® Wood Treatment Technology has received a Global GreenTag GreenRate™ Level A this declaration is 'Fit-for-Purpose' and confirmed for Green Building compliance.
9. MicroPro® Wood Treatment Technology has received GreenTag PhD™ proving claims that MicroPro® is safe for human health (and ecosystems).

Naturally Better

www.klc.co.nz

DETAILS MAY BE SUBJECT TO CHANGE WITHOUT NOTICE
COPYRIGHT © "KLC LIMITED" ALL RIGHTS ASSERTED

TYPE Generation II H3.2 Exterior Cladding Systems
Bevel Back Weatherboard - Cavity Fix

NAME Internal Corner

CODEMARK™ AQ-020216-CMNZ

DRAWING SCALE	ISSUE DATE
1:2 @ A4	26/10/2018

DRAWING No	REVISION
KLC CF20 BB42	1

CAD REF : KLC CF20 BB40-46 - GENERAL DETAILS 01.dwg
DATE : 05/11/2018

LEGEND:

- (CB) CAVITY BATTEN: 45x20 KLC Generation II, MicroPro H3.2 FJ Cavity Batten to form a 20mm cavity
- (IL) INTERNAL LINING: Selected Internal Lining
- (BW) BUILDING WRAP: Flexible Wall Underlay, As per NZBC E2/AS1 - Table 23, In extra high wind zones, Ridgid Underlay required (9.1.7.2 E2/AS1)
- (CS) CORNER SOAKER: With 15mm Min cover over weatherboards
- (FT3) FLEXIBLE FLASHING TAPE: Flexible flashing tape lapped into corner
- (TF) TIMBER FRAME: H1.2 min treated timber framing
- (WB) WEATHER BOARD: KLC Generation II, MicroPro H3.2 Bevel Back Weatherboard. Profile to NZS 3617
- (IN) INSULATION: Selected Insulation
- (CF) CORNER FLASHING: Aluminium, PVC or Stainless Steel corner flashing. Refer NZBC E2/AS1 4.3
  50x50 Hem or Hook to Flashing Edges
  75x75 NO, Hem or Hook Required
  EXTRA HIGH WIND ZONE
  100x100 Hem or Hook to Flashing Edges,
  Refer NZBC E2/AS1 4.5.1

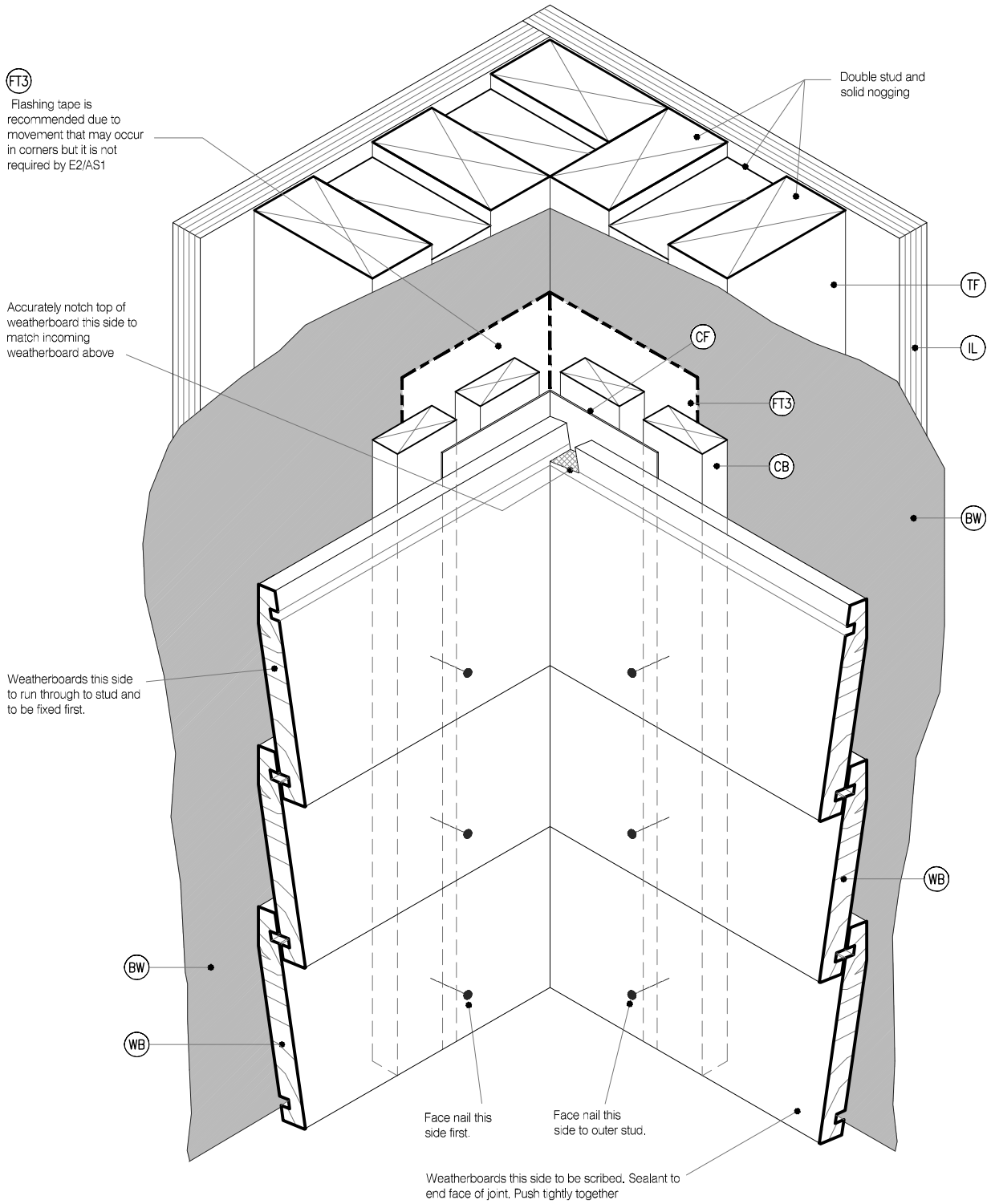

MicoPro® Wood Treatment Technology

1. KLC use the MicroPro Micronized Copper Azole (MCA) based preservative system for their wood products. It accounts for 80% of wood treated in the US for domestic applications
2. Micronized Copper Azole (MCA) preservatives are EPA-approved for use in NZ and AUS to NZS3640:2003 and AS1604.12012
3. MicroPro preservative is applied using high-pressure and vacuum-pressure in the impregnation process in KLC's modern, automated treatment facility.
4. Cut End Treatment : All cut ends surfaces are to be double coated and sealed before fixing. With a alkyd (oil based) primer
5. MicroPro preservative solution has benefits of reduced corrosivity. Use Hot Dip Galvanised Fasteners & Stainless Steel fasteners. MicroPro may be placed in direct contact with Aluminium Building products in interior applications, and above ground exterior applications that provide proper water drainage
6. MicroPro® is the first wood treatment process to be EPP (Environmentally Preferable Product) certified by Scientific Certification Systems based on a life cycle assessment.
7. MicroPro® is environmentally sustainable, is low leaching, low VOC emissions and the award of the GREENGUARD Children and Schools' Certification from the Greenguard® Environmental Institute.
8. MicroPro® Wood Treatment Technology has received a Global GreenTag GreenRate™ Level A this declaration is 'Fit-for-Purpose' and confirmed for Green Building compliance.
9. MicroPro® Wood Treatment Technology has received GreenTag PhD™ proving claims that MicroPro® is safe for human health (and ecosystems).

Naturally Better

www.klc.co.nz

DETAILS MAY BE SUBJECT TO CHANGE WITHOUT NOTICE
COPYRIGHT © "KLC LIMITED" ALL RIGHTS ASSERTED

TYPE Generation II H3.2 Exterior Cladding Systems
Bevel Back Weatherboard - Cavity Fix

NAME 3D - Internal Corner

CODEMARK™ AQ-020216-CMNZ

DRAWING SCALE	ISSUE DATE
1:2 @ A4	26/10/2018

DRAWING No	REVISION
KLC CF20 BB43	1

CAD REF : KLC CF20 BB40-46 - GENERAL DETAILS 01.dwg
DATE : 05/11/2018

LEGEND:

- (CB) CAVITY BATTEN: 45x20 KLC Generation II, MicroPro H3.2 FJ Cavity Batten to form a 20mm cavity
- (IL) INTERNAL LINING: Selected Internal Lining
- (BW) BUILDING WRAP: Flexible Wall Underlay, As per NZBC E2/AS1 - Table 23, In extra high wind zones, Ridgid Underlay required (9.1.7.2 E2/AS1)
- (CS) CORNER SOAKER: With 15mm Min cover over weatherboards
- (FT3) FLEXIBLE FLASHING TAPE: Flexible flashing tape lapped into corner
- (TF) TIMBER FRAME: H1.2 min treated timber framing
- (WB) WEATHER BOARD: KLC Generation II, MicroPro H3.2 Bevel Back Weatherboard. Profile to NZS 3617
- (IN) INSULATION: Selected Insulation
- (CF) CORNER FLASHING: Aluminium, PVC or Stainless Steel corner flashing. Refer NZBC E2/AS1 4.3
  50x50 Hem or Hook to Flashing Edges
  75x75 NO, Hem or Hook Required
  EXTRA HIGH WIND ZONE
  100x100 Hem or Hook to Flashing Edges,
  Refer NZBC E2/AS1 4.5.1

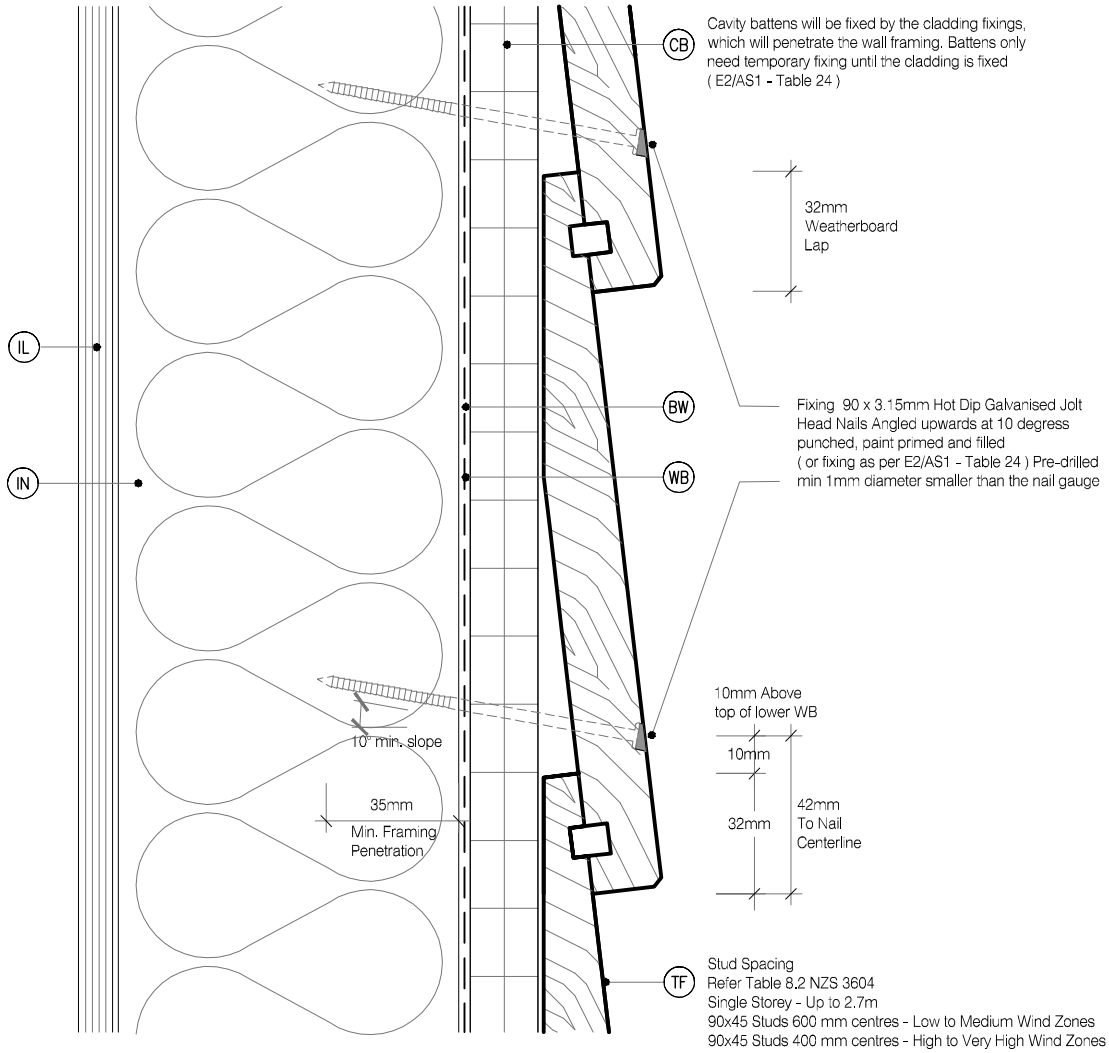

MicoPro® Wood Treatment Technology

1. KLC use the MicroPro Micronized Copper Azole (MCA) based preservative system for their wood products. It accounts for 80% of wood treated in the US for domestic applications
2. Micronized Copper Azole (MCA) preservatives are EPA-approved for use in NZ and AUS to NZS3640:2003 and AS1604.12012
3. MicroPro preservative is applied using high-pressure and vacuum-pressure in the impregnation process in KLC's modern, automated treatment facility.
4. Cut End Treatment : All cut ends surfaces are to be double coated and sealed before fixing. With a alkyd (oil based) primer
5. MicroPro preservative solution has benefits of reduced corrosivity. Use Hot Dip Galvanised Fasteners & Stainless Steel fasteners. MicroPro may be placed in direct contact with Aluminium Building products in interior applications, and above ground exterior applications that provide proper water drainage
6. MicroPro® is the first wood treatment process to be EPP (Environmentally Preferable Product) certified by Scientific Certification Systems based on a life cycle assessment.
7. MicroPro® is environmentally sustainable, is low leaching, low VOC emissions and the award of the GREENGUARD Children and Schools' Certification from the Greenguard® Environmental Institute.
8. MicroPro® Wood Treatment Technology has received a Global GreenTag GreenRate™ Level A this declaration is 'Fit-for-Purpose' and confirmed for Green Building compliance.
9. MicroPro® Wood Treatment Technology has received GreenTag PhD™ proving claims that MicroPro® is safe for human health (and ecosystems).

Naturally Better

www.klc.co.nz

DETAILS MAY BE SUBJECT TO CHANGE WITHOUT NOTICE
COPYRIGHT © "KLC LIMITED" ALL RIGHTS ASSERTED

TYPE Generation II H3.2 Exterior Cladding Systems
Bevel Back Weatherboard - Cavity Fix

NAME Weatherboard Fixing

CODEMARK™ AQ-020216-CMNZ

DRAWING SCALE	ISSUE DATE
1:2 @ A4	26/10/2018

DRAWING No	REVISION
KLC CF20 BB44	1

CAD REF : KLC CF20 BB40-46 - GENERAL DETAILS 01.dwg
DATE : 05/11/2018

LEGEND:

- (CB) CAVITY BATTEN: 45x20 KLC Generation II, MicroPro H3.2 FJ Cavity Batten to form a 20mm cavity
- (IL) INTERNAL LINING: Selected Internal Lining
- (BW) BUILDING WRAP: Flexible Wall Underlay, As per NZBC E2/AS1 - Table 23, In extra high wind zones, Ridgid Underlay required (9.1.7.2 E2/AS1)
- (CS) CORNER SOAKER: With 15mm Min cover over weatherboards
- (FT3) FLEXIBLE FLASHING TAPE: Flexible flashing tape lapped into corner
- (TF) TIMBER FRAME: H1.2 min treated timber framing
- (WB) WEATHER BOARD: KLC Generation II, MicroPro H3.2 Bevel Back Weatherboard. Profile to NZS 3617
- (IN) INSULATION: Selected Insulation
- (CF) CORNER FLASHING: Aluminium, PVC or Stainless Steel corner flashing. Refer NZBC E2/AS1 4.3
  50x50 Hem or Hook to Flashing Edges
  75x75 NO, Hem or Hook Required
  EXTRA HIGH WIND ZONE
  100x100 Hem or Hook to Flashing Edges,
  Refer NZBC E2/AS1 4.5.1

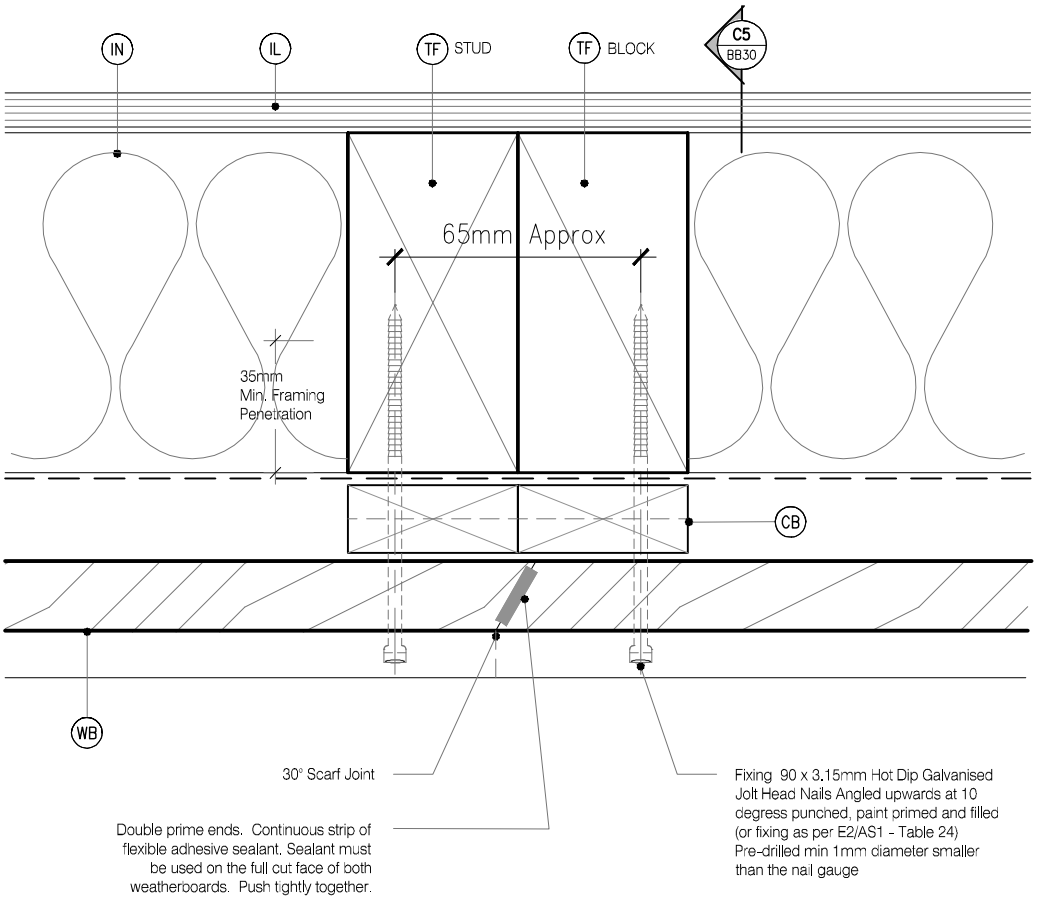

When joining weatherboards a 30 ° Scarf joint is to be used. This joint must face away from the prevailing weather.
Alternatively a corrosion resistant soaker can be used, refer to E2/AS1 - 9.4.4.2 & Soakers materials to 4.32 to Paragraph 4.3.8

MicoPro® Wood Treatment Technology

1. KLC use the MicroPro Micronized Copper Azole (MCA) based preservative system for their wood products. It accounts for 80% of wood treated in the US for domestic applications
2. Micronized Copper Azole (MCA) preservatives are EPA-approved for use in NZ and AUS to NZS3640:2003 and AS1604.12012
3. MicroPro preservative is applied using high-pressure and vacuum-pressure in the impregnation process in KLC's modern, automated treatment facility.
4. Cut End Treatment : All cut ends surfaces are to be double coated and sealed before fixing. With a alkyd (oil based) primer
5. MicroPro preservative solution has benefits of reduced corrosivity. Use Hot Dip Galvanised Fasteners & Stainless Steel fasteners. MicroPro may be placed in direct contact with Aluminium Building products in interior applications, and above ground exterior applications that provide proper water drainage
6. MicroPro® is the first wood treatment process to be EPP (Environmentally Preferable Product) certified by Scientific Certification Systems based on a life cycle assessment.
7. MicroPro® is environmentally sustainable, is low leaching, low VOC emissions and the award of the GREENGUARD Children and Schools' Certification from the Greenguard® Environmental Institute.
8. MicroPro® Wood Treatment Technology has received a Global GreenTag GreenRate™ Level A this declaration is 'Fit-for-Purpose' and confirmed for Green Building compliance.
9. MicroPro® Wood Treatment Technology has received GreenTag PhD™ proving claims that MicroPro® is safe for human health (and ecosystems).

CAD REF : KLC CF20 BB40-46 - GENERAL DETAILS 01.dwg
DATE : 05/11/2018

Naturally Better

www.klc.co.nz

DETAILS MAY BE SUBJECT TO CHANGE WITHOUT NOTICE
COPYRIGHT © "KLC LIMITED" ALL RIGHTS ASSERTED

TYPE Generation II H3.2 Exterior Cladding Systems
Bevel Back Weatherboard - Cavity Fix

NAME Scarf Joint - Horizontal

CODEMARK™ AQ-020216-CMNZ

DRAWING SCALE	ISSUE DATE
1:2 @ A4	26/10/2018

DRAWING No	REVISION
KLC CF20 BB45	1

LEGEND:

- (PEF) PEF ROD BACKING: Foam backing rod with sealant to perimeter that forms a waterproof air-seal. (Sealant 2:1 Ratio)
- (CB) CAVITY BATTEN: 45x20 KLC Generation II, MicroPro H3.2 FJ Cavity Batten to form a 20mm cavity
- (IL) INTERNAL LINING: Selected Internal Lining
- (BW) BUILDING WRAP: Flexible Wall Underlay, As per NZBC E2/AS1 - Table 23, In extra high wind zones, Ridgid Underlay required (9.1.7.2 E2/AS1)
- (IN) INSULATION: Selected Insulation
- (TF) TIMBER FRAME: H1.2 min treated timber framing
- (FT3) FLEXIBLE FLASHING TAPE: Flexible flashing tape lapped into corner, Refer NZBC E2/AS1 4.3.11
- (FT4) FLEXIBLE FLASHING TAPE: Flexible flashing tape wrapped around pipe and over building wrap, Refer NZBC E2/AS1 4.3.11 & Figure 68
- (WB) WEATHER BOARD: KLC Generation II, MicroPro H3.2 Bevel Back Weatherboard. Profile to NZS 3617
- (BC1) BOXED CORNER COVER : 98x18 KLC Generation II, MicroPro H3.2 Cover Batten to boxed corners
- (BC2) BOXED CORNER COVER: 85x18 KLC Generation II, MicroPro H3.2 Cover Batten to boxed corners
- (CF) CORNER FLASHING: Aluminium, PVC or Stainless Steel corner flashing. Refer NZBC E2/AS1 4.3
  50x50 Hem or Hook to Flashing Edges
  75x75 NO, Hem or Hook Required
  EXTRA HIGH WIND ZONE
  100x100 Hem or Hook to Flashing Edges,
  Refer NZBC E2/AS1 4.5.1
- (S) SCRIBER: KLC Generation II, MicroPro H3.2 (10mm wide min) profile cut to fit weatherboard, sealant to back of scriber and 75 x 3.15mm Galvanised nail in 3mm predrilled hole.
  40x18 or 65x18 depending on weatherboard size

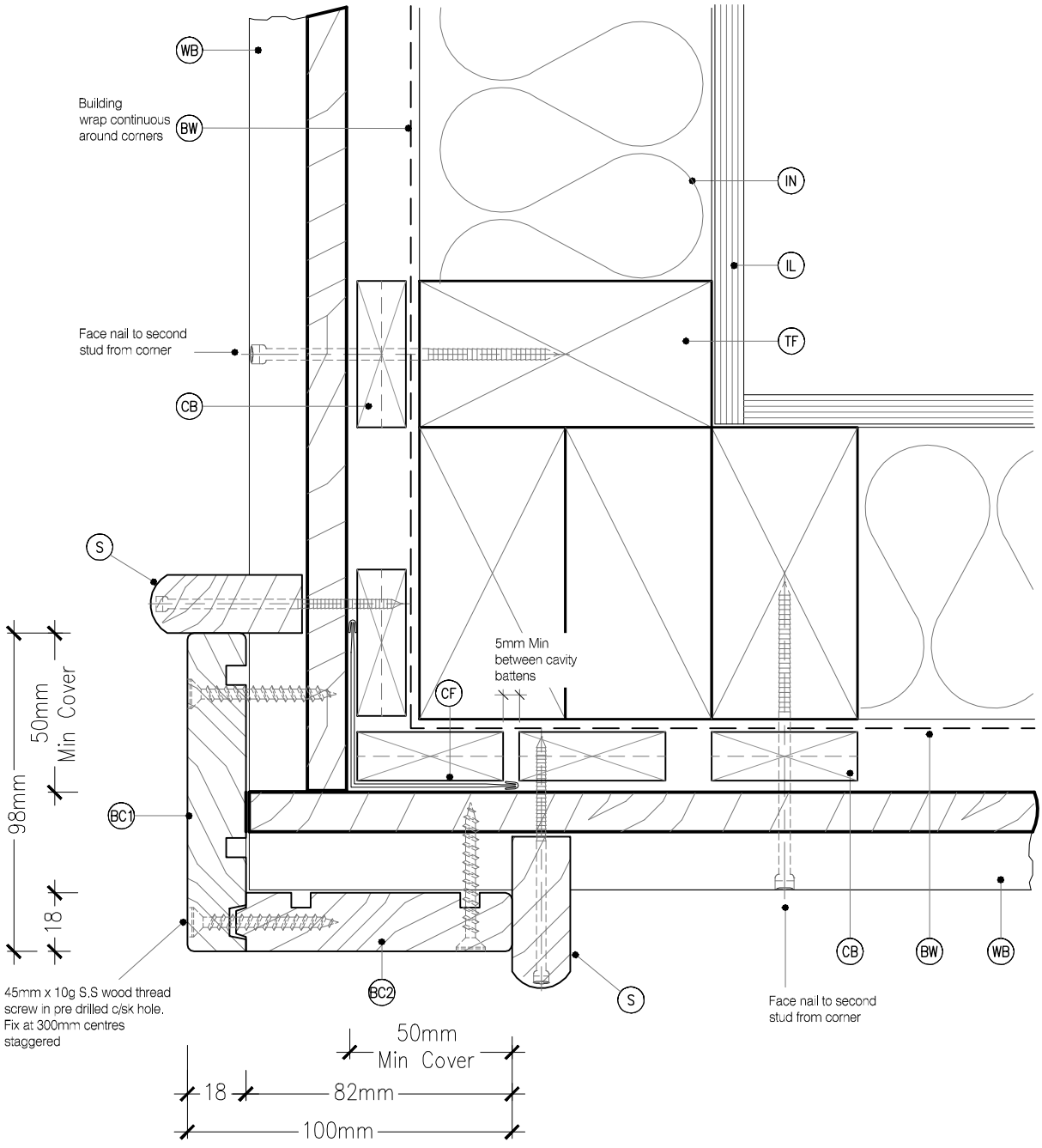

MicoPro® Wood Treatment Technology

1. KLC use the MicroPro Micronized Copper Azole (MCA) based preservative system for their wood products. It accounts for 80% of wood treated in the US for domestic applications
2. Micronized Copper Azole (MCA) preservatives are EPA-approved for use in NZ and AUS to NZS3640:2003 and AS1604.12012
3. MicroPro preservative is applied using high-pressure and vacuum-pressure in the impregnation process in KLC's modern, automated treatment facility.
4. Cut End Treatment : All cut ends surfaces are to be double coated and sealed before fixing. With a alkyd (oil based) primer
5. MicroPro preservative solution has benefits of reduced corrosivity. Use Hot Dip Galvanised Fasteners & Stainless Steel fasteners. MicroPro may be placed in direct contact with Aluminium Building products in interior applications, and above ground exterior applications that provide proper water drainage
6. MicroPro® is the first wood treatment process to be EPP (Environmentally Preferable Product) certified by Scientific Certification Systems based on a life cycle assessment.
7. MicroPro® is environmentally sustainable, is low leaching, low VOC emissions and the award of the GREENGUARD Children and Schools' Certification from the Greenguard® Environmental Institute.
8. MicroPro® Wood Treatment Technology has received a Global GreenTag GreenRate™ Level A this declaration is 'Fit-for-Purpose' and confirmed for Green Building compliance.
9. MicroPro® Wood Treatment Technology has received GreenTag PhD™ proving claims that MicroPro® is safe for human health (and ecosystems).

Naturally Better

www.klc.co.nz

DETAILS MAY BE SUBJECT TO CHANGE WITHOUT NOTICE
COPYRIGHT © "KLC LIMITED" ALL RIGHTS ASSERTED

TYPE Generation II H3.2 Exterior Cladding Systems
Bevel Back Weatherboard - Cavity Fix

NAME External Boxed Corner

CODEMARK™ AQ-020216-CMNZ

DRAWING SCALE	ISSUE DATE
1:2 @ A4	26/10/2018

DRAWING No	REVISION
KLC CF20 BB50	1

CAD REF : KLC CF20 BB50-56 - GENERAL DETAILS 02.dwg
DATE : 05/11/2018

LEGEND:

- (PEF) PEF ROD BACKING: Foam backing rod with sealant to perimeter that forms a waterproof air-seal. (Sealant 2:1 Ratio)
- (CB) CAVITY BATTEN: 45x20 KLC Generation II, MicroPro H3.2 FJ Cavity Batten to form a 20mm cavity
- (IL) INTERNAL LINING: Selected Internal Lining
- (BW) BUILDING WRAP: Flexible Wall Underlay, As per NZBC E2/AS1 - Table 23, In extra high wind zones, Ridgid Underlay required (9.1.7.2 E2/AS1)
- (IN) INSULATION: Selected Insulation
- (TF) TIMBER FRAME: H1.2 min treated timber framing
- (FT3) FLEXIBLE FLASHING TAPE: Flexible flashing tape lapped into corner, Refer NZBC E2/AS1 4.3.11
- (FT4) FLEXIBLE FLASHING TAPE: Flexible flashing tape wrapped around pipe and over building wrap, Refer NZBC E2/AS1 4.3.11 & Figure 68
- (WB) WEATHER BOARD: KLC Generation II, MicroPro H3.2 Bevel Back Weatherboard. Profile to NZS 3617
- (BC1) BOXED CORNER COVER : 98x18 KLC Generation II, MicroPro H3.2 Cover Batten to boxed corners
- (BC2) BOXED CORNER COVER: 85x18 KLC Generation II, MicroPro H3.2 Cover Batten to boxed corners
- (CF) CORNER FLASHING: Aluminium, PVC or Stainless Steel corner flashing. Refer NZBC E2/AS1 4.3
  50x50 Hem or Hook to Flashing Edges
  75x75 NO, Hem or Hook Required
  EXTRA HIGH WIND ZONE
  100x100 Hem or Hook to Flashing Edges,
  Refer NZBC E2/AS1 4.5.1
- (S) SCRIBER: KLC Generation II, MicroPro H3.2 (10mm wide min) profile cut to fit weatherboard, sealant to back of scriber and 75 x 3.15mm Galvanised nail in 3mm predrilled hole.
  40x18 or 65x18 depending on weatherboard size

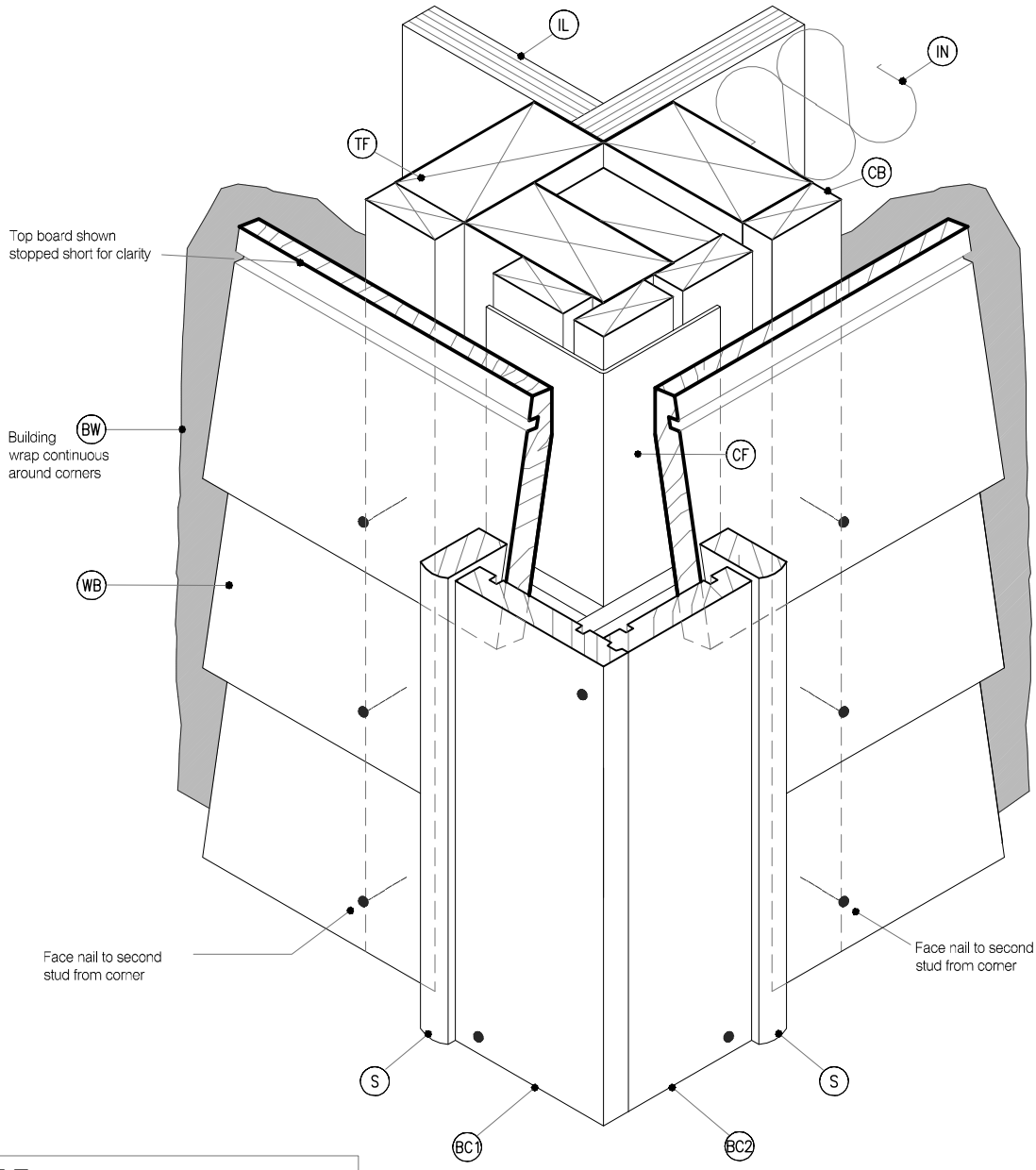

NOTE:
Box corner trim must not be continuous over solid floor joists.

MicoPro® Wood Treatment Technology

1. KLC use the MicroPro Micronized Copper Azole (MCA) based preservative system for their wood products. It accounts for 80% of wood treated in the US for domestic applications
2. Micronized Copper Azole (MCA) preservatives are EPA-approved for use in NZ and AUS to NZS3640:2003 and AS1604.12012
3. MicroPro preservative is applied using high-pressure and vacuum-pressure in the impregnation process in KLC's modern, automated treatment facility.
4. Cut End Treatment : All cut ends surfaces are to be double coated and sealed before fixing. With a alkyd (oil based) primer
5. MicroPro preservative solution has benefits of reduced corrosivity. Use Hot Dip Galvanised Fasteners & Stainless Steel fasteners. MicroPro may be placed in direct contact with Aluminium Building products in interior applications, and above ground exterior applications that provide proper water drainage
6. MicroPro® is the first wood treatment process to be EPP (Environmentally Preferable Product) certified by Scientific Certification Systems based on a life cycle assessment.
7. MicroPro® is environmentally sustainable, is low leaching, low VOC emissions and the award of the GREENGUARD Children and Schools' Certification from the Greenguard® Environmental Institute.
8. MicroPro® Wood Treatment Technology has received a Global GreenTag GreenRate™ Level A this declaration is 'Fit-for-Purpose' and confirmed for Green Building compliance.
9. MicroPro® Wood Treatment Technology has received GreenTag PhD™ proving claims that MicroPro® is safe for human health (and ecosystems).

CAD REF : KLC CF20 BB50-56 - GENERAL DETAILS 02.dwg
DATE : 05/11/2018

Naturally Better
www.klc.co.nz

DETAILS MAY BE SUBJECT TO CHANGE WITHOUT NOTICE
COPYRIGHT © "KLC LIMITED" ALL RIGHTS ASSERTED

TYPE Generation II H3.2 Exterior Cladding Systems
Bevel Back Weatherboard - Cavity Fix

NAME 3D - External Boxed Corner

CODEMARK™ AQ-020216-CMNZ

DRAWING SCALE	ISSUE DATE
1:2 @ A4	26/10/2018

DRAWING No	REVISION
KLC CF20 BB51	1

LEGEND :

- (PEF) PEF ROD BACKING: Foam backing rod with sealant to perimeter that forms a waterproof air-seal. (Sealant 2:1 Ratio)
- (CB) CAVITY BATTEN: 45x20 KLC Generation II, MicroPro H3.2 FJ Cavity Batten to form a 20mm cavity
- (IL) INTERNAL LINING: Selected Internal Lining
- (BW) BUILDING WRAP: Flexible Wall Underlay, As per NZBC E2/AS1 - Table 23, In extra high wind zones, Ridgid Underlay required (9.1.7.2 E2/AS1)
- (IN) INSULATION: Selected Insulation
- (TF) TIMBER FRAME: H1.2 min treated timber framing
- (FT3) FLEXIBLE FLASHING TAPE: Flexible flashing tape lapped into corner, Refer NZBC E2/AS1 4.3.11
- (FT4) FLEXIBLE FLASHING TAPE: Flexible flashing tape wrapped around pipe and over building wrap, Refer NZBC E2/AS1 4.3.11 & Figure 68
- (WB) WEATHER BOARD: KLC Generation II, MicroPro H3.2 Bevel Back Weatherboard. Profile to NZS 3617
- (BC1) BOXED CORNER COVER : 98x18 KLC Generation II, MicroPro H3.2 Cover Batten to boxed corners
- (BC2) BOXED CORNER COVER: 85x18 KLC Generation II, MicroPro H3.2 Cover Batten to boxed corners
- (CF) CORNER FLASHING: Aluminium, PVC or Stainless Steel corner flashing. Refer NZBC E2/AS1 4.3 50x50 Hem or Hook to Flashing Edges 75x75 NO, Hem or Hook Required EXTRA HIGH WIND ZONE 100x100 Hem or Hook to Flashing Edges, Refer NZBC E2/AS1 4.5.1
- (S) SCRIBER: KLC Generation II, MicroPro H3.2 (10mm wide min) profile cut to fit weatherboard, sealant to back of scriber and 75 x 3.15mm Galvanised nail in 3mm predrilled hole. 40x18 or 65x18 depending on weatherboard size

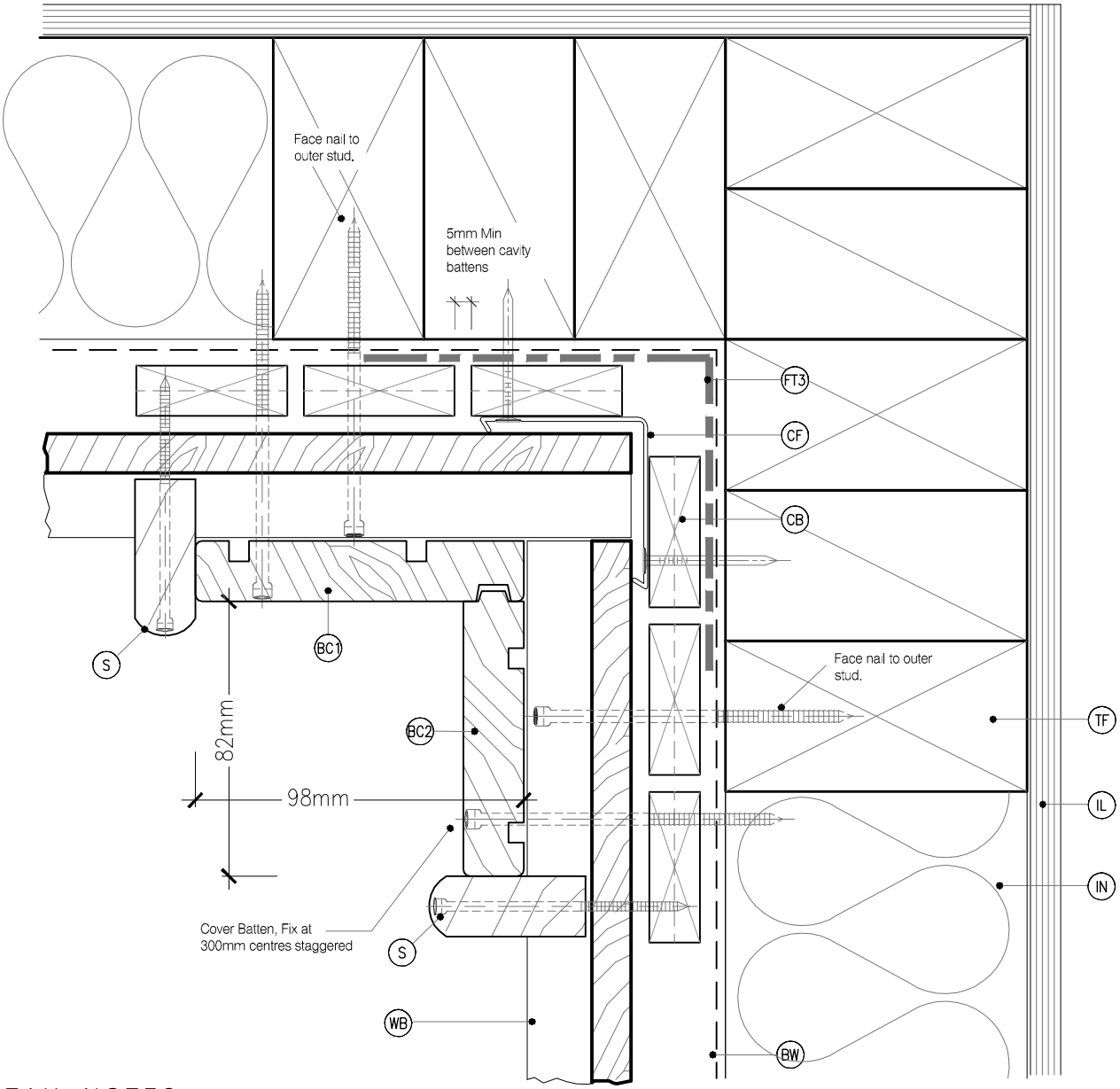

DETAIL NOTES :

1. Aluminium extrusion must not be continuous over solid floor joists.
2. Corner Flashing is recommended but not required by E2/AS1
3. Flashing tape is recommended due to movement that may occur in corners but it is not required by E2/AS1

MicoPro® Wood Treatment Technology

1. KLC use the MicroPro Micronized Copper Azole (MCA) based preservative system for their wood products. It accounts for 80% of wood treated in the US for domestic applications
2. Micronized Copper Azole (MCA) preservatives are EPA-approved for use in NZ and AUS to NZS3640:2003 and AS1604.12012
3. MicroPro preservative is applied using high-pressure and vacuum-pressure in the impregnation process in KLC's modern, automated treatment facility.
4. Cut End Treatment : All cut ends surfaces are to be double coated and sealed before fixing. With a alkyd (oil based) primer
5. MicroPro preservative solution has benefits of reduced corrosivity. Use Hot Dip Galvanised Fasteners & Stainless Steel fasteners. MicroPro may be placed in direct contact with Aluminium Building products in interior applications, and above ground exterior applications that provide proper water drainage
6. MicroPro® is the first wood treatment process to be EPP (Environmentally Preferable Product) certified by Scientific Certification Systems based on a life cycle assessment.
7. MicroPro® is environmentally sustainable, is low leaching, low VOC emissions and the award of the GREENGUARD Children and Schools' Certification from the Greenguard® Environmental Institute.
8. MicroPro® Wood Treatment Technology has received a Global GreenTag GreenRate™ Level A this declaration is 'Fit-for-Purpose' and confirmed for Green Building compliance.
9. MicroPro® Wood Treatment Technology has received GreenTag PhD™ proving claims that MicroPro® is safe for human health (and ecosystems).

Naturally Better

www.klc.co.nz

DETAILS MAY BE SUBJECT TO CHANGE WITHOUT NOTICE
COPYRIGHT © "KLC LIMITED" ALL RIGHTS ASSERTED

TYPE Generation II H3.2 Exterior Cladding Systems
Bevel Back Weatherboard - Cavity Fix

NAME Internal Boxed Corner

CODEMARK™ AQ-020216-CMNZ

DRAWING SCALE	ISSUE DATE
1:2 @ A4	26/10/2018

DRAWING No	REVISION
KLC CF20 BB52	1

CAD REF : KLC CF20 BB50-56 - GENERAL DETAILS 02.dwg
DATE : 05/11/2018

LEGEND:

- (PEF) PEF ROD BACKING: Foam backing rod with sealant to perimeter that forms a waterproof air-seal. (Sealant 2:1 Ratio)
- (CB) CAVITY BATTEN: 45x20 KLC Generation II, MicroPro H3.2 FJ Cavity Batten to form a 20mm cavity
- (IL) INTERNAL LINING: Selected Internal Lining
- (BW) BUILDING WRAP: Flexible Wall Underlay, As per NZBC E2/AS1 - Table 23, In extra high wind zones, Ridgid Underlay required (9.1.7.2 E2/AS1)
- (IN) INSULATION: Selected Insulation
- (TF) TIMBER FRAME: H1.2 min treated timber framing
- (FT3) FLEXIBLE FLASHING TAPE: Flexible flashing tape lapped into corner, Refer NZBC E2/AS1 4.3.11
- (FT4) FLEXIBLE FLASHING TAPE: Flexible flashing tape wrapped around pipe and over building wrap, Refer NZBC E2/AS1 4.3.11 & Figure 68
- (WB) WEATHER BOARD: KLC Generation II, MicroPro H3.2 Bevel Back Weatherboard. Profile to NZS 3617
- (BC1) BOXED CORNER COVER : 98x18 KLC Generation II, MicroPro H3.2 Cover Batten to boxed corners
- (BC2) BOXED CORNER COVER: 85x18 KLC Generation II, MicroPro H3.2 Cover Batten to boxed corners
- (CF) CORNER FLASHING: Aluminium, PVC or Stainless Steel corner flashing. Refer NZBC E2/AS1 4.3
  50x50 Hem or Hook to Flashing Edges
  75x75 NO, Hem or Hook Required
  EXTRA HIGH WIND ZONE
  100x100 Hem or Hook to Flashing Edges,
  Refer NZBC E2/AS1 4.5.1
- (S) SCRIBER: KLC Generation II, MicroPro H3.2 (10mm wide min) profile cut to fit weatherboard, sealant to back of scriber and 75 x 3.15mm Galvanised nail in 3mm predrilled hole.
  40x18 or 65x18 depending on weatherboard size

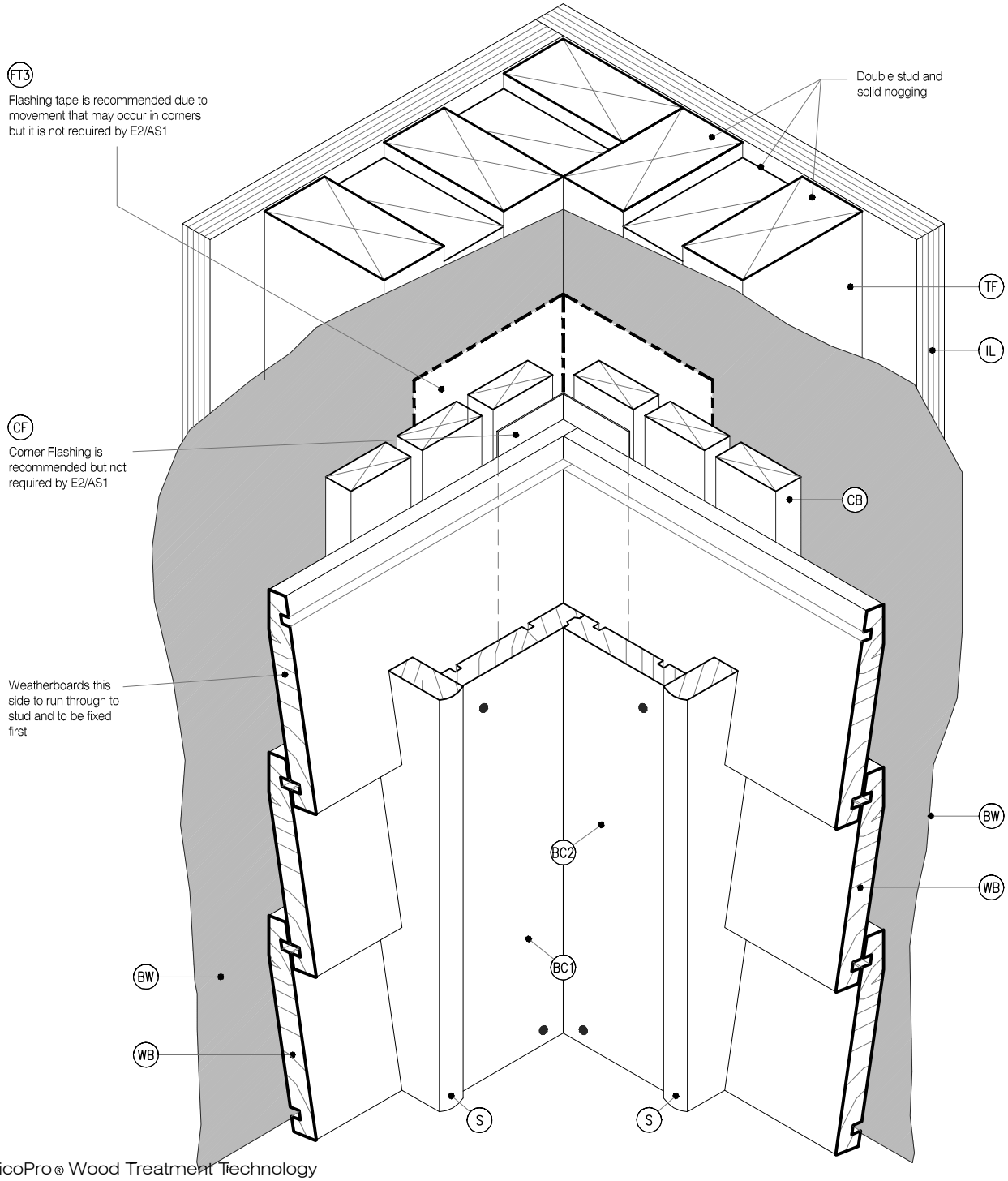

MicoPro® Wood Treatment Technology

1. KLC use the MicroPro Micronized Copper Azole (MCA) based preservative system for their wood products. It accounts for 80% of wood treated in the US for domestic applications
2. Micronized Copper Azole (MCA) preservatives are EPA-approved for use in NZ and AUS to NZS3640:2003 and AS1604.12012
3. MicroPro preservative is applied using high-pressure and vacuum-pressure in the impregnation process in KLC's modern, automated treatment facility.
4. Cut End Treatment : All cut ends surfaces are to be double coated and sealed before fixing. With a alkyd (oil based) primer
5. MicroPro preservative solution has benefits of reduced corrosivity. Use Hot Dip Galvanised Fasteners & Stainless Steel fasteners. MicroPro may be placed in direct contact with Aluminium Building products in interior applications, and above ground exterior applications that provide proper water drainage
6. MicroPro® is the first wood treatment process to be EPP (Environmentally Preferable Product) certified by Scientific Certification Systems based on a life cycle assessment.
7. MicroPro® is environmentally sustainable, is low leaching, low VOC emissions and the award of the GREENGUARD Children and Schools' Certification from the Greenguard® Environmental Institute.
8. MicroPro® Wood Treatment Technology has received a Global GreenTag GreenRate™ Level A this declaration is 'Fit-for-Purpose' and confirmed for Green Building compliance.
9. MicroPro® Wood Treatment Technology has received GreenTag PhD™ proving claims that MicroPro® is safe for human health (and ecosystems).

CAD REF : KLC CF20 BB50-56 - GENERAL DETAILS 02.dwg
DATE : 05/11/2018

Naturally Better
www.klc.co.nz
DETAILS MAY BE SUBJECT TO CHANGE WITHOUT NOTICE
COPYRIGHT © "KLC LIMITED" ALL RIGHTS ASSERTED

TYPE Generation II H3.2 Exterior Cladding Systems
Bevel Back Weatherboard - Cavity Fix

NAME 3D - Internal Boxed Corner

CODEMARK™ AQ-020216-CMNZ

DRAWING SCALE	ISSUE DATE
1:2 @ A4	26/10/2018

DRAWING No	REVISION
KLC CF20 BB53	1

LEGEND:

- (PEF) PEF ROD BACKING: Foam backing rod with sealant to perimeter that forms a waterproof air-seal. (Sealant 2:1 Ratio)
- (CB) CAVITY BATTEN: 45x20 KLC Generation II, MicroPro H3.2 FJ Cavity Batten to form a 20mm cavity
- (IL) INTERNAL LINING: Selected Internal Lining
- (BW) BUILDING WRAP: Flexible Wall Underlay, As per NZBC E2/AS1 - Table 23, In extra high wind zones, Ridgid Underlay required (9.1.7.2 E2/AS1)
- (IN) INSULATION: Selected Insulation
- (TF) TIMBER FRAME: H1.2 min treated timber framing
- (FT3) FLEXIBLE FLASHING TAPE: Flexible flashing tape lapped into corner, Refer NZBC E2/AS1 4.3.11
- (FT4) FLEXIBLE FLASHING TAPE: Flexible flashing tape wrapped around pipe and over building wrap, Refer NZBC E2/AS1 4.3.11 & Figure 68
- (WB) WEATHER BOARD: KLC Generation II, MicroPro H3.2 Bevel Back Weatherboard. Profile to NZS 3617
- (BC1) BOXED CORNER COVER : 98x18 KLC Generation II, MicroPro H3.2 Cover Batten to boxed corners
- (BC2) BOXED CORNER COVER: 85x18 KLC Generation II, MicroPro H3.2 Cover Batten to boxed corners
- (CF) CORNER FLASHING: Aluminium, PVC or Stainless Steel corner flashing. Refer NZBC E2/AS1 4.3
  50x50 Hem or Hook to Flashing Edges
  75x75 NO, Hem or Hook Required
  EXTRA HIGH WIND ZONE
  100x100 Hem or Hook to Flashing Edges,
  Refer NZBC E2/AS1 4.5.1
- (S) SCRIBER: KLC Generation II, MicroPro H3.2 (10mm wide min) profile cut to fit weatherboard, sealant to back of scriber and 75 x 3.15mm Galvanised nail in 3mm predrilled hole.
  40x18 or 65x18 depending on weatherboard size

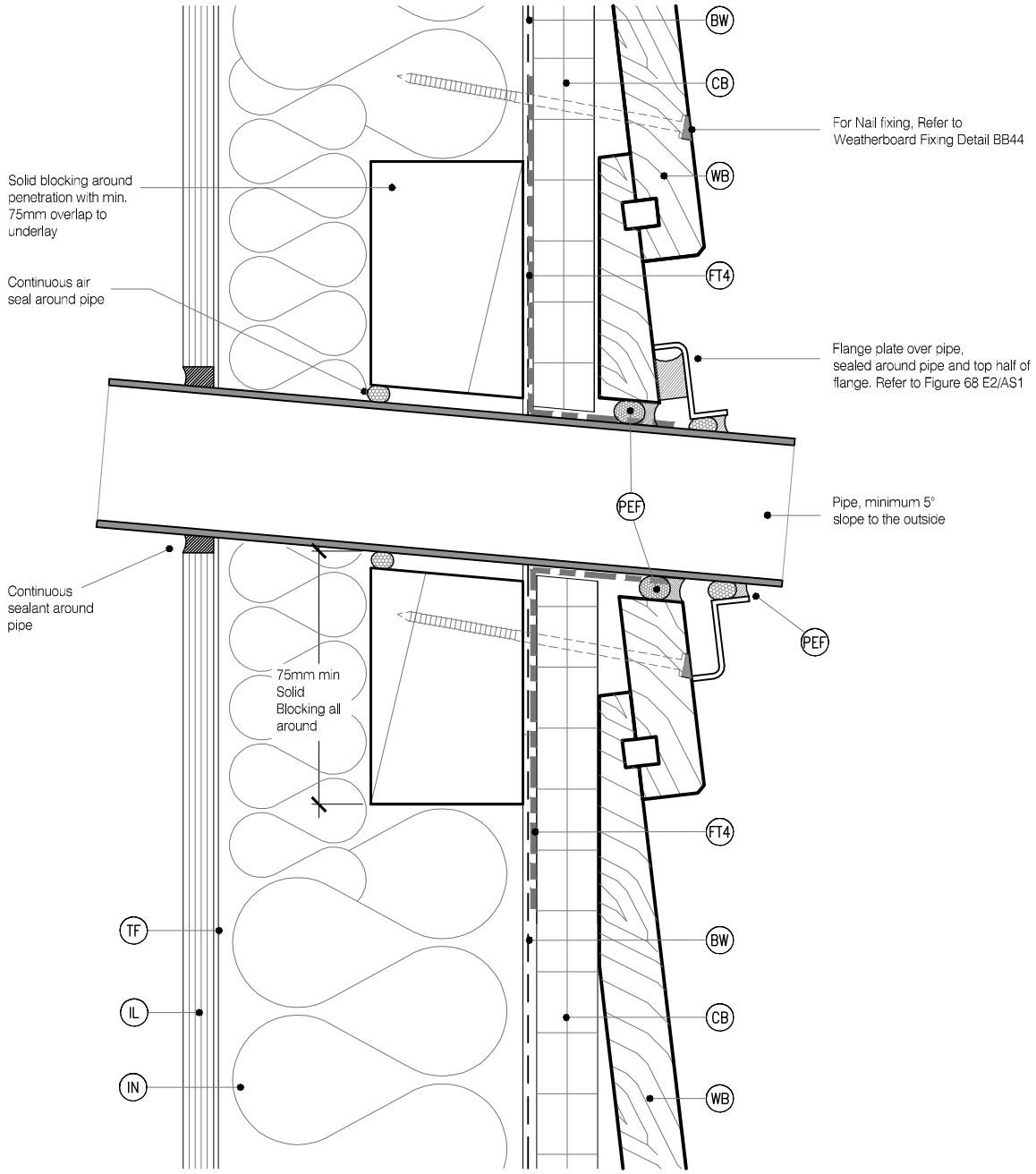

MicoPro® Wood Treatment Technology

1. KLC use the MicroPro Micronized Copper Azole (MCA) based preservative system for their wood products. It accounts for 80% of wood treated in the US for domestic applications
2. Micronized Copper Azole (MCA) preservatives are EPA-approved for use in NZ and AUS to NZS3640:2003 and AS1604.12012
3. MicroPro preservative is applied using high-pressure and vacuum-pressure in the impregnation process in KLC's modern, automated treatment facility.
4. Cut End Treatment : All cut ends surfaces are to be double coated and sealed before fixing. With a alkyd (oil based) primer
5. MicroPro preservative solution has benefits of reduced corrosivity. Use Hot Dip Galvanised Fasteners & Stainless Steel fasteners. MicroPro may be placed in direct contact with Aluminium Building products in interior applications, and above ground exterior applications that provide proper water drainage
6. MicroPro® is the first wood treatment process to be EPP (Environmentally Preferable Product) certified by Scientific Certification Systems based on a life cycle assessment.
7. MicroPro® is environmentally sustainable, is low leaching, low VOC emissions and the award of the GREENGUARD Children and Schools' Certification from the Greenguard® Environmental Institute.
8. MicroPro® Wood Treatment Technology has received a Global GreenTag GreenRate™ Level A this declaration is 'Fit-for-Purpose' and confirmed for Green Building compliance.
9. MicroPro® Wood Treatment Technology has received GreenTag PhD™ proving claims that MicroPro® is safe for human health (and ecosystems).

CAD REF : KLC CF20 BB50-56 - GENERAL DETAILS 02.dwg
DATE : 05/11/2018

KLC Naturally Better

www.klc.co.nz

DETAILS MAY BE SUBJECT TO CHANGE WITHOUT NOTICE
COPYRIGHT © "KLC LIMITED" ALL RIGHTS ASSERTED

TYPE Generation II H3.2 Exterior Cladding Systems
Bevel Back Weatherboard - Cavity Fix

NAME Pipe Penetration

CODEMARK™ AQ-020216-CMNZ

DRAWING SCALE	ISSUE DATE
1:2 @ A4	26/10/2018

DRAWING No	REVISION
KLC CF20 BB54	1

LEGEND:

- (PEF) PEF ROD BACKING: Foam backing rod with sealant to perimeter that forms a waterproof air-seal. (Sealant 2:1 Ratio)
- (CB) CAVITY BATTEN: 45x20 KLC Generation II, MicroPro H3.2 FJ Cavity Batten to form a 20mm cavity
- (IL) INTERNAL LINING: Selected Internal Lining
- (BW) BUILDING WRAP: Flexible Wall Underlay, As per NZBC E2/AS1 - Table 23, In extra high wind zones, Ridgid Underlay required (9.1.7.2 E2/AS1)
- (IN) INSULATION: Selected Insulation
- (TF) TIMBER FRAME: H1.2 min treated timber framing
- (FT3) FLEXIBLE FLASHING TAPE: Flexible flashing tape lapped into corner, Refer NZBC E2/AS1 4.3.11
- (FT4) FLEXIBLE FLASHING TAPE: Flexible flashing tape wrapped around pipe and over building wrap, Refer NZBC E2/AS1 4.3.11 & Figure 68
- (WB) WEATHER BOARD: KLC Generation II, MicroPro H3.2 Bevel Back Weatherboard. Profile to NZS 3617
- (BC1) BOXED CORNER COVER : 98x18 KLC Generation II, MicroPro H3.2 Cover Batten to boxed corners
- (BC2) BOXED CORNER COVER: 85x18 KLC Generation II, MicroPro H3.2 Cover Batten to boxed corners
- (CF) CORNER FLASHING: Aluminium, PVC or Stainless Steel corner flashing. Refer NZBC E2/AS1 4.3 50x50 Hem or Hook to Flashing Edges 75x75 NO, Hem or Hook Required EXTRA HIGH WIND ZONE 100x100 Hem or Hook to Flashing Edges, Refer NZBC E2/AS1 4.5.1
- (S) SCRIBER: KLC Generation II, MicroPro H3.2 (10mm wide min) profile cut to fit weatherboard, sealant to back of scriber and 75 x 3.15mm Galvanised nail in 3mm predrilled hole. 40x18 or 65x18 depending on weatherboard size

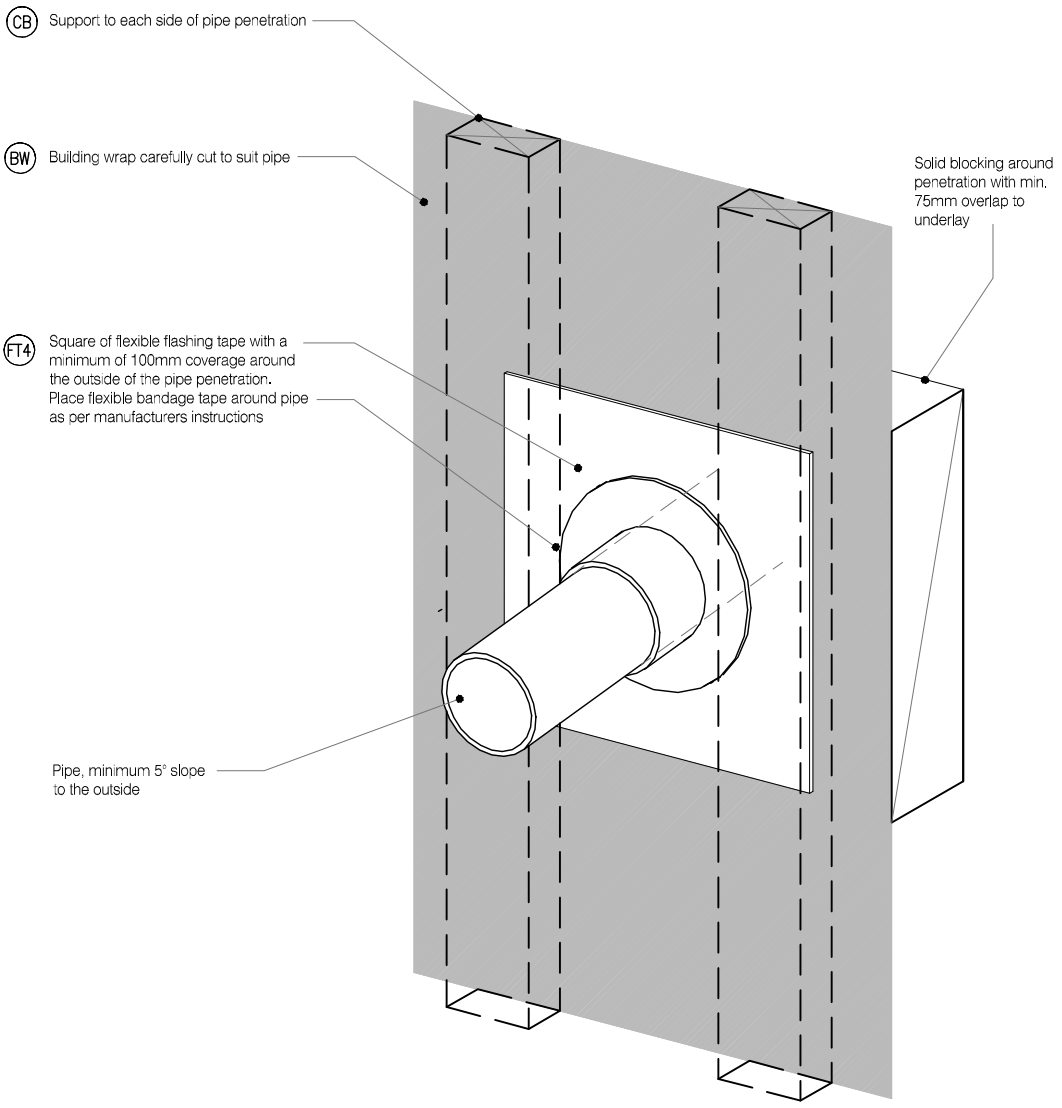

MicoPro® Wood Treatment Technology

1. KLC use the MicroPro Micronized Copper Azole (MCA) based preservative system for their wood products. It accounts for 80% of wood treated in the US for domestic applications
2. Micronized Copper Azole (MCA) preservatives are EPA-approved for use in NZ and AUS to NZS3640:2003 and AS1604.12012
3. MicroPro preservative is applied using high-pressure and vacuum-pressure in the impregnation process in KLC's modern, automated treatment facility.
4. Cut End Treatment : All cut ends surfaces are to be double coated and sealed before fixing. With a alkyd (oil based) primer
5. MicroPro preservative solution has benefits of reduced corrosivity. Use Hot Dip Galvanised Fasteners & Stainless Steel fasteners. MicroPro may be placed in direct contact with Aluminium Building products in interior applications, and above ground exterior applications that provide proper water drainage
6. MicroPro® is the first wood treatment process to be EPP (Environmentally Preferable Product) certified by Scientific Certification Systems based on a life cycle assessment.
7. MicroPro® is environmentally sustainable, is low leaching, low VOC emissions and the award of the GREENGUARD Children and Schools' Certification from the Greenguard® Environmental Institute.
8. MicroPro® Wood Treatment Technology has received a Global GreenTag GreenRate™ Level A this declaration is 'Fit-for-Purpose' and confirmed for Green Building compliance.
9. MicroPro® Wood Treatment Technology has received GreenTag PhD™ proving claims that MicroPro® is safe for human health (and ecosystems).

CAD REF : KLC CF20 BB50-56 - GENERAL DETAILS 02.dwg
DATE : 05/11/2018

Naturally Better

www.klc.co.nz

DETAILS MAY BE SUBJECT TO CHANGE WITHOUT NOTICE
COPYRIGHT © "KLC LIMITED" ALL RIGHTS ASSERTED

TYPE Generation II H3.2 Exterior Cladding Systems
Bevel Back Weatherboard - Cavity Fix

NAME 3D - Pipe Penetration

CODEMARK™ AQ-020216-CMNZ

DRAWING SCALE	ISSUE DATE
1:2 @ A4	26/10/2018

DRAWING No	REVISION
KLC CF20 BB55	1

LEGEND:

- (CB) CAVITY BATTEN: 45x20 KLC Generation II, MicroPro H3.2 FJ Cavity Batten to form a 20mm cavity
- (IL) INTERNAL LINING: Selected Internal Lining
- (BW) BUILDING WRAP: Flexible Wall Underlay, As per NZBC E2/AS1 - Table 23, In extra high wind zones, Ridgid Underlay required (9.1.7.2 E2/AS1)
- (IN) INSULATION: Selected Insulation
- (TF) TIMBER FRAME: H1.2 min treated timber framing
- (FT2) FLEXIBLE FLASHING TAPE: Additional underlay of flexible flashing tape lapped over Apron flashing
- (WB) WEATHER BOARD: KLC Generation II, MicroPro H3.2 Bevel Back Weatherboard. Profile to NZS 3617
- (MR) METAL ROOFING : Selected Metal Roofing
- (RU) ROOFING UNDERLAY: Selected Roofing Underlay As Per AS/AZS4200 with Mesh or Self Supported
- (TP) TIMBER PACKER: Cant Strip, MicroPro H3.2 Treated
- (HS) HEAD SOFFIT SCRIBER: KLC Generation II, MicroPro H3.2. Fix with 75 x 3.15mm Galvanised nail in 3mm predrilled hole
- (AF) APRON FLASHING: Materials as per E2/AS1 4.0, Coating to match roofing material or refer E2/AS1 Table 21. Flashing Cover 130mm min. (L,M & H ≥ 10°) All others 200mm Refer Table 7 E2/AS1
- (SL) SOFFIT LINING: As Selected (Typicaly 7.5mm Hardies Soffit Liner)

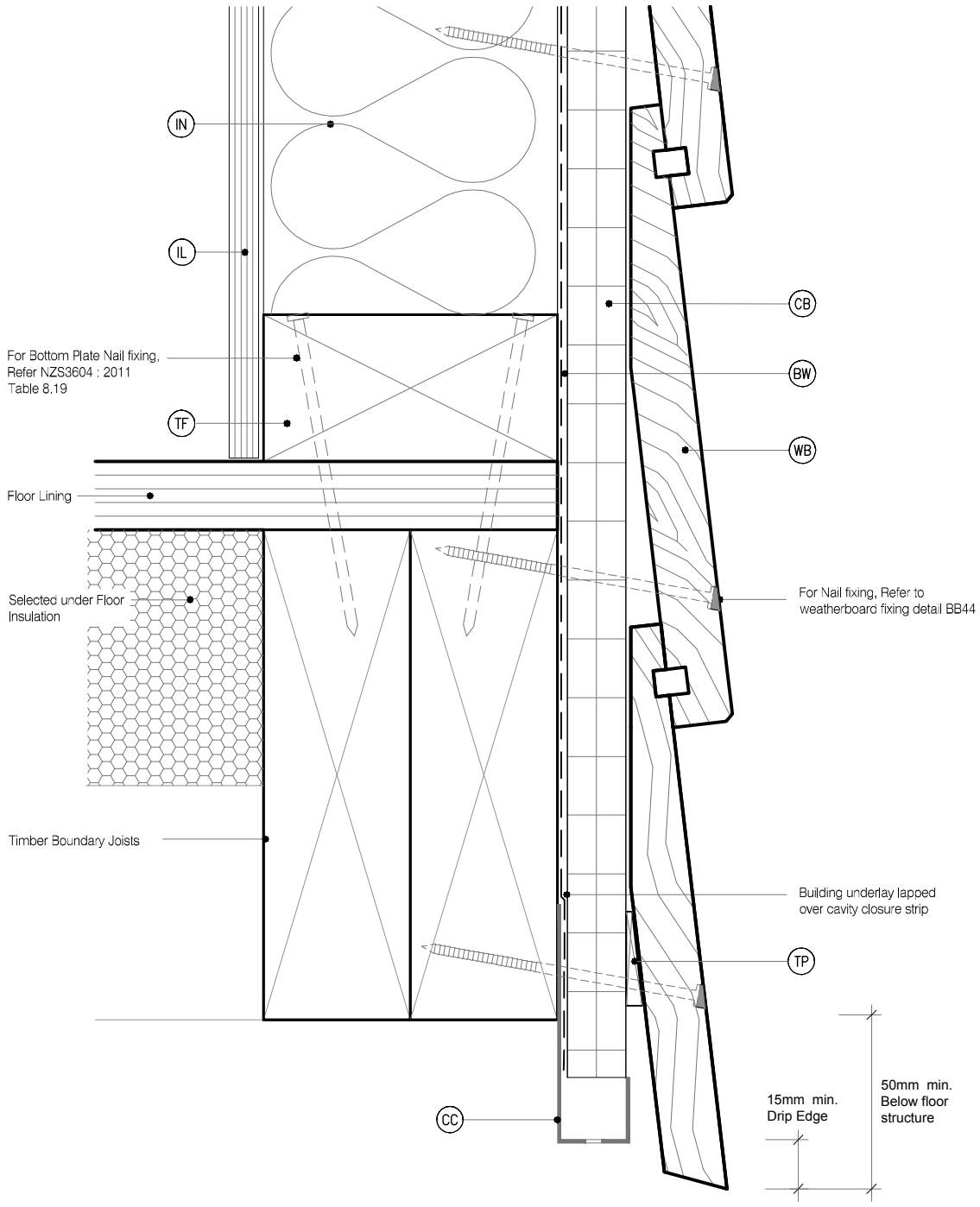

MicoPro® Wood Treatment Technology

1. KLC use the MicroPro Micronized Copper Azole (MCA) based preservative system for their wood products. It accounts for 80% of wood treated in the US for domestic applications
2. Micronized Copper Azole (MCA) preservatives are EPA-approved for use in NZ and AUS to NZS3640:2003 and AS1604.12012
3. MicroPro preservative is applied using high-pressure and vacuum-pressure in the impregnation process in KLC's modern, automated treatment facility.
4. Cut End Treatment : All cut ends surfaces are to be double coated and sealed before fixing. With a alkyd (oil based) primer
5. MicroPro preservative solution has benefits of reduced corrosivity. Use Hot Dip Galvanised Fasteners & Stainless Steel fasteners. MicroPro may be placed in direct contact with Aluminium Building products in interior applications, and above ground exterior applications that provide proper water drainage
6. MicroPro® is the first wood treatment process to be EPP (Environmentally Preferable Product) certified by Scientific Certification Systems based on a life cycle assessment.
7. MicroPro® is environmentally sustainable, is low leaching, low VOC emissions and the award of the GREENGUARD Children and Schools' Certification from the Greenguard® Environmental Institute.
8. MicroPro® Wood Treatment Technology has received a Global GreenTag GreenRate™ Level A this declaration is 'Fit-for-Purpose' and confirmed for Green Building compliance.
9. MicroPro® Wood Treatment Technology has received GreenTag PhD™ proving claims that MicroPro® is safe for human health (and ecosystems).

Naturally Better

www.klc.co.nz

DETAILS MAY BE SUBJECT
TO CHANGE WITHOUT NOTICE
COPYRIGHT © "KLC LIMITED" ALL RIGHTS ASSERTED

TYPE Generation II H3.2 Exterior Cladding Systems
Bevel Back Weatherboard - Cavity Fix

NAME Base of Wall, Timber

CODEMARK™ AQ-020216-CMNZ

DRAWING SCALE	ISSUE DATE
1:2 @ A4	26/10/2018

DRAWING No	REVISION
KLC CF20 BB60	1

CAD REF : KLC CF20 BB60-66 - GENERAL DETAILS 03.dwg
DATE : 05/11/2018

LEGEND:

- (CB) CAVITY BATTEN: 45x20 KLC Generation II, MicroPro H3.2 FJ Cavity Batten to form a 20mm cavity
- (IL) INTERNAL LINING: Selected Internal Lining
- (BW) BUILDING WRAP: Flexible Wall Underlay, As per NZBC E2/AS1 - Table 23, In extra high wind zones, Ridgid Underlay required (9.1.7.2 E2/AS1)
- (IN) INSULATION: Selected Insulation
- (TF) TIMBER FRAME: H1.2 min treated timber framing
- (FT2) FLEXIBLE FLASHING TAPE: Additional underlay of flexible flashing tape lapped over Apron flashing
- (WB) WEATHER BOARD: KLC Generation II, MicroPro H3.2 Bevel Back Weatherboard. Profile to NZS 3617
- (MR) METAL ROOFING : Selected Metal Roofing
- (RU) ROOFING UNDERLAY: Selected Roofing Underlay As Per AS/AZS4200 with Mesh or Self Supported
- (TP) TIMBER PACKER: Cant Strip, MicroPro H3.2 Treated
- (HS) HEAD SOFFIT SCRIBER: KLC Generation II, MicroPro H3.2. Fix with 75 x 3.15mm Galvanised nail in 3mm predrilled hole
- (AF) APRON FLASHING: Materials as per E2/AS1 4.0, Coating to match roofing material or refer E2/AS1 Table 21. Flashing Cover 130mm min. (L,M & H ≥ 10°) All others 200mm Refer Table 7 E2/AS1
- (SL) SOFFIT LINING: As Selected (Typicaly 7.5mm Hardies Soffit Liner)

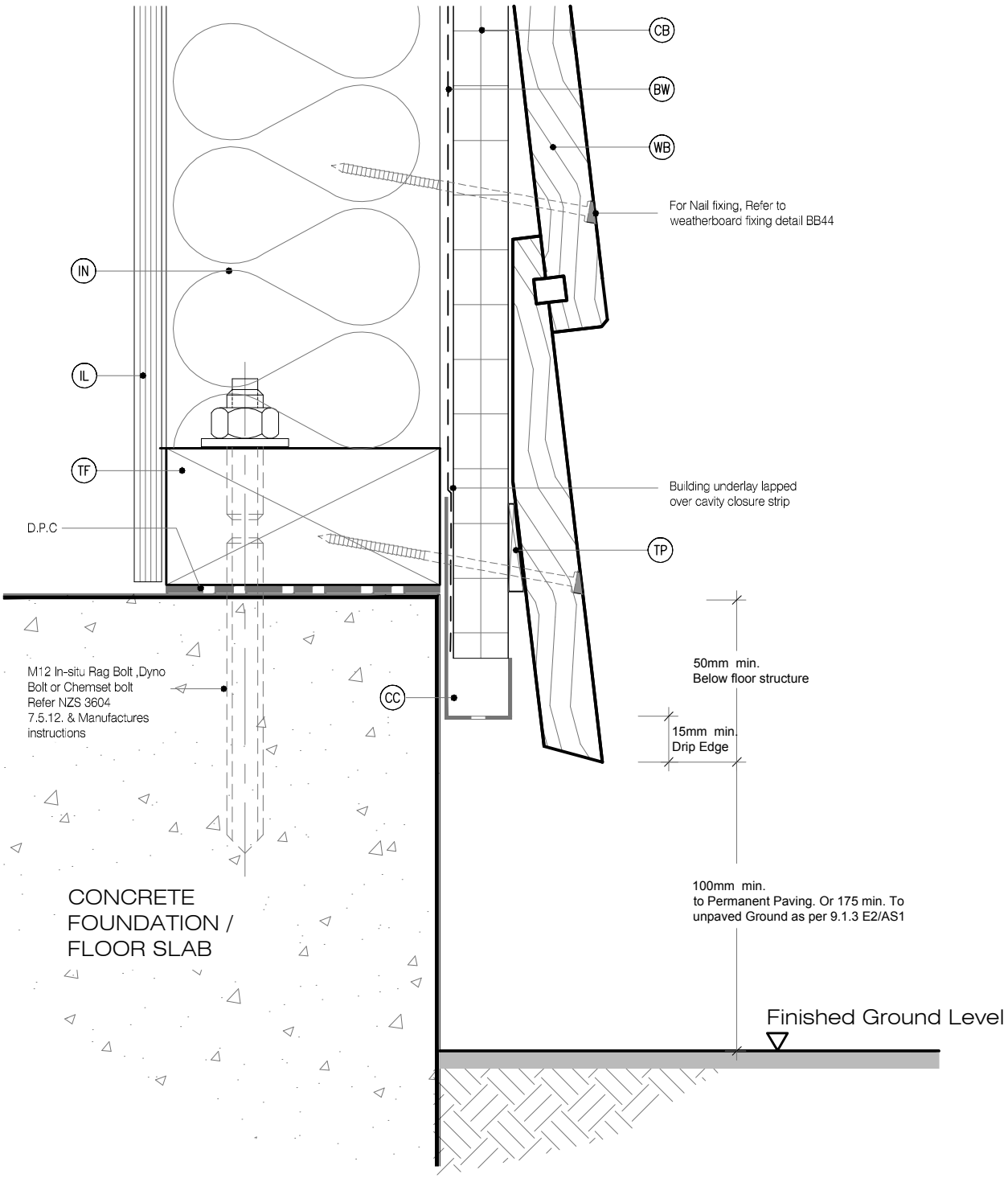

MicoPro® Wood Treatment Technology

1. KLC use the MicroPro Micronized Copper Azole (MCA) based preservative system for their wood products. It accounts for 80% of wood treated in the US for domestic applications
2. Micronized Copper Azole (MCA) preservatives are EPA-approved for use in NZ and AUS to NZS3640:2003 and AS1604.12012
3. MicroPro preservative is applied using high-pressure and vacuum-pressure in the impregnation process in KLC's modern, automated treatment facility.
4. Cut End Treatment : All cut ends surfaces are to be double coated and sealed before fixing. With a alkyd (oil based) primer
5. MicroPro preservative solution has benefits of reduced corrosivity. Use Hot Dip Galvanised Fasteners & Stainless Steel fasteners. MicroPro may be placed in direct contact with Aluminium Building products in interior applications, and above ground exterior applications that provide proper water drainage
6. MicroPro® is the first wood treatment process to be EPP (Environmentally Preferable Product) certified by Scientific Certification Systems based on a life cycle assessment.
7. MicroPro® is environmentally sustainable, is low leaching, low VOC emissions and the award of the GREENGUARD Children and Schools' Certification from the Greenguard® Environmental Institute.
8. MicroPro® Wood Treatment Technology has received a Global GreenTag GreenRate™ Level A this declaration is 'Fit-for-Purpose' and confirmed for Green Building compliance.
9. MicroPro® Wood Treatment Technology has received GreenTag PhD™ proving claims that MicroPro® is safe for human health (and ecosystems).

CAD REF : KLC CF20 BB60-66 - GENERAL DETAILS 03.dwg
DATE : 05/11/2018

Naturally Better

www.klc.co.nz

DETAILS MAY BE SUBJECT TO CHANGE WITHOUT NOTICE
COPYRIGHT © "KLC LIMITED" ALL RIGHTS ASSERTED

TYPE Generation II H3.2 Exterior Cladding Systems
Bevel Back Weatherboard - Cavity Fix

NAME Base of Wall, Concrete

CODEMARK™ AQ-020216-CMNZ

DRAWING SCALE	ISSUE DATE
1:2 @ A4	26/10/2018

DRAWING No	REVISION
KLC CF20 BB61	1

LEGEND:

- (CB) CAVITY BATTEN: 45x20 KLC Generation II, MicroPro H3.2 FJ Cavity Batten to form a 20mm cavity
- (IL) INTERNAL LINING: Selected Internal Lining
- (BW) BUILDING WRAP: Flexible Wall Underlay, As per NZBC E2/AS1 - Table 23, In extra high wind zones, Ridgid Underlay required (9.1.7.2 E2/AS1)
- (IN) INSULATION: Selected Insulation
- (TF) TIMBER FRAME: H1.2 min treated timber framing
- (FT2) FLEXIBLE FLASHING TAPE: Additional underlay of flexible flashing tape lapped over Apron flashing
- (WB) WEATHER BOARD: KLC Generation II, MicroPro H3.2 Bevel Back Weatherboard. Profile to NZS 3617
- (MR) METAL ROOFING : Selected Metal Roofing
- (RU) ROOFING UNDERLAY: Selected Roofing Underlay As Per AS/AZS4200 with Mesh or Self Supported
- (TP) TIMBER PACKER: Cant Strip, MicroPro H3.2 Treated
- (HS) HEAD SOFFIT SCRIBER: KLC Generation II, MicroPro H3.2. Fix with 75 x 3.15mm Galvanised nail in 3mm predrilled hole
- (AF) APRON FLASHING: Materials as per E2/AS1 4.0, Coating to match roofing material or refer E2/AS1 Table 21. Flashing Cover 130mm min. (L,M & H ≥ 10°) All others 200mm Refer Table 7 E2/AS1
- (SL) SOFFIT LINING: As Selected (Typicaly 7.5mm Hardies Soffit Liner)

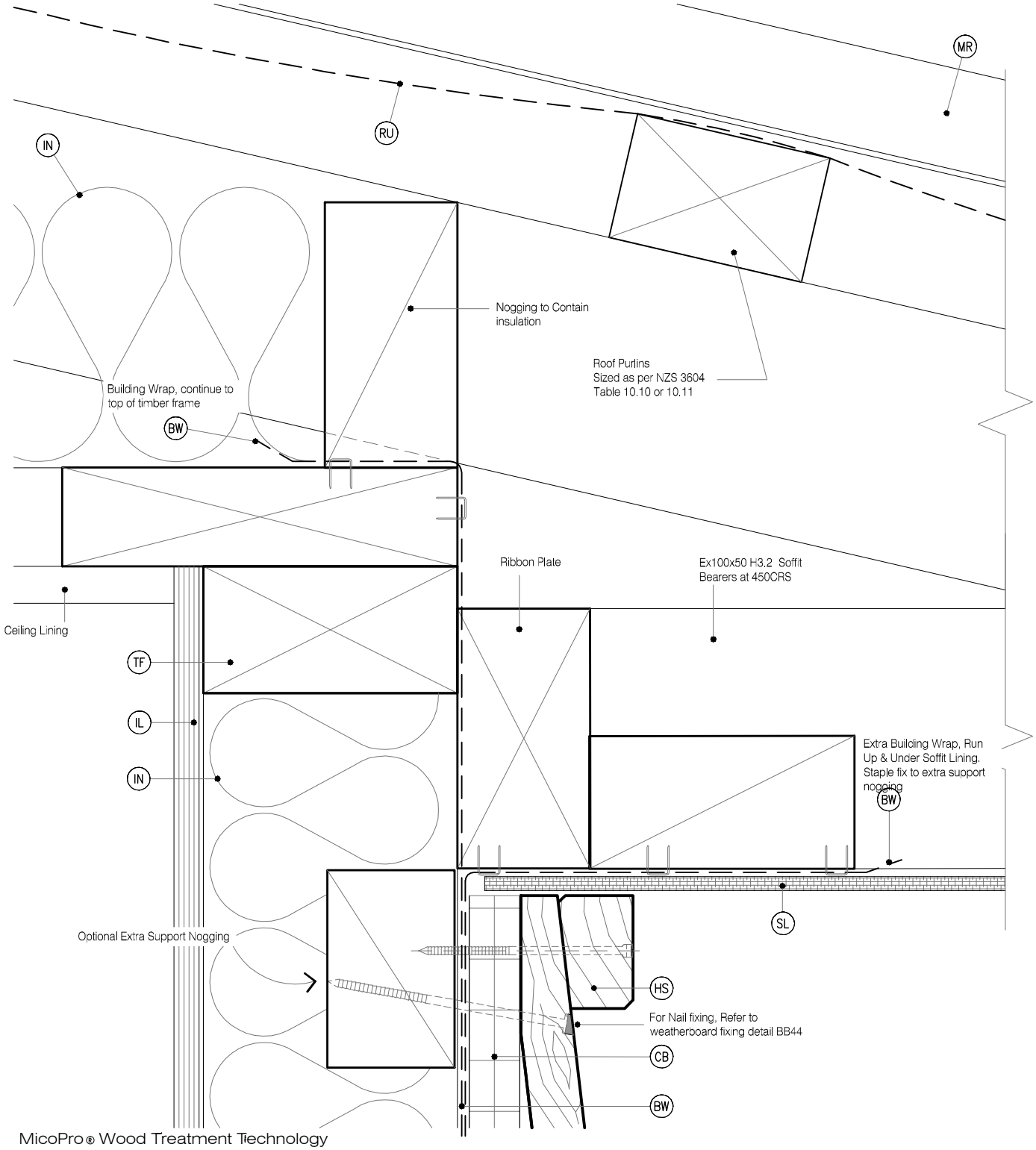

MicoPro® Wood Treatment Technology

1. KLC use the MicroPro Micronized Copper Azole (MCA) based preservative system for their wood products. It accounts for 80% of wood treated in the US for domestic applications
2. Micronized Copper Azole (MCA) preservatives are EPA-approved for use in NZ and AUS to NZS3640:2003 and AS1604.12012
3. MicroPro preservative is applied using high-pressure and vacuum-pressure in the impregnation process in KLC's modern, automated treatment facility.
4. Cut End Treatment : All cut ends surfaces are to be double coated and sealed before fixing. With a alkyd (oil based) primer
5. MicroPro preservative solution has benefits of reduced corrosivity. Use Hot Dip Galvanised Fasteners & Stainless Steel fasteners. MicroPro may be placed in direct contact with Aluminium Building products in interior applications, and above ground exterior applications that provide proper water drainage
6. MicroPro® is the first wood treatment process to be EPP (Environmentally Preferable Product) certified by Scientific Certification Systems based on a life cycle assessment.
7. MicroPro® is environmentally sustainable, is low leaching, low VOC emissions and the award of the GREENGUARD Children and Schools' Certification from the Greenguard® Environmental Institute.
8. MicroPro® Wood Treatment Technology has received a Global GreenTag GreenRate™ Level A this declaration is 'Fit-for-Purpose' and confirmed for Green Building compliance.
9. MicroPro® Wood Treatment Technology has received GreenTag PhD™ proving claims that MicroPro® is safe for human health (and ecosystems).

KLC Naturally Better

www.klc.co.nz

DETAILS MAY BE SUBJECT TO CHANGE WITHOUT NOTICE
COPYRIGHT © "KLC LIMITED" ALL RIGHTS ASSERTED

TYPE Generation II H3.2 Exterior Cladding Systems
Bevel Back Weatherboard - Cavity Fix

NAME Soffit Detail at Wall

CODEMARK™ AQ-020216-CMNZ

DRAWING SCALE	ISSUE DATE
1:2 @ A4	26/10/2018

DRAWING No	REVISION
KLC CF20 BB62	1

CAD REF : KLC CF20 BB60-66 - GENERAL DETAILS 03.dwg
DATE : 05/11/2018

LEGEND:

- (CB) CAVITY BATTEN: 45x20 KLC Generation II, MicroPro H3.2 FJ Cavity Batten to form a 20mm cavity
- (IL) INTERNAL LINING: Selected Internal Lining
- (BW) BUILDING WRAP: Flexible Wall Underlay, As per NZBC E2/AS1 - Table 23, In extra high wind zones, Ridgid Underlay required (9.1.7.2 E2/AS1)
- (IN) INSULATION: Selected Insulation
- (TF) TIMBER FRAME: H1.2 min treated timber framing
- (FT2) FLEXIBLE FLASHING TAPE: Additional underlay of flexible flashing tape lapped over Apron flashing
- (WB) WEATHER BOARD: KLC Generation II, MicroPro H3.2 Bevel Back Weatherboard. Profile to NZS 3617
- (MR) METAL ROOFING : Selected Metal Roofing
- (RU) ROOFING UNDERLAY: Selected Roofing Underlay As Per AS/AZS4200 with Mesh or Self Supported
- (TP) TIMBER PACKER: Cant Strip, MicroPro H3.2 Treated
- (HS) HEAD SOFFIT SCRIBER: KLC Generation II, MicroPro H3.2. Fix with 75 x 3.15mm Galvanised nail in 3mm predrilled hole
- (AF) APRON FLASHING: Materials as per E2/AS1 4.0, Coating to match roofing material or refer E2/AS1 Table 21. Flashing Cover 130mm min. (L,M & H ≥ 10°) All others 200mm Refer Table 7 E2/AS1
- (SL) SOFFIT LINING: As Selected (Typicaly 7.5mm Hardies Soffit Liner)

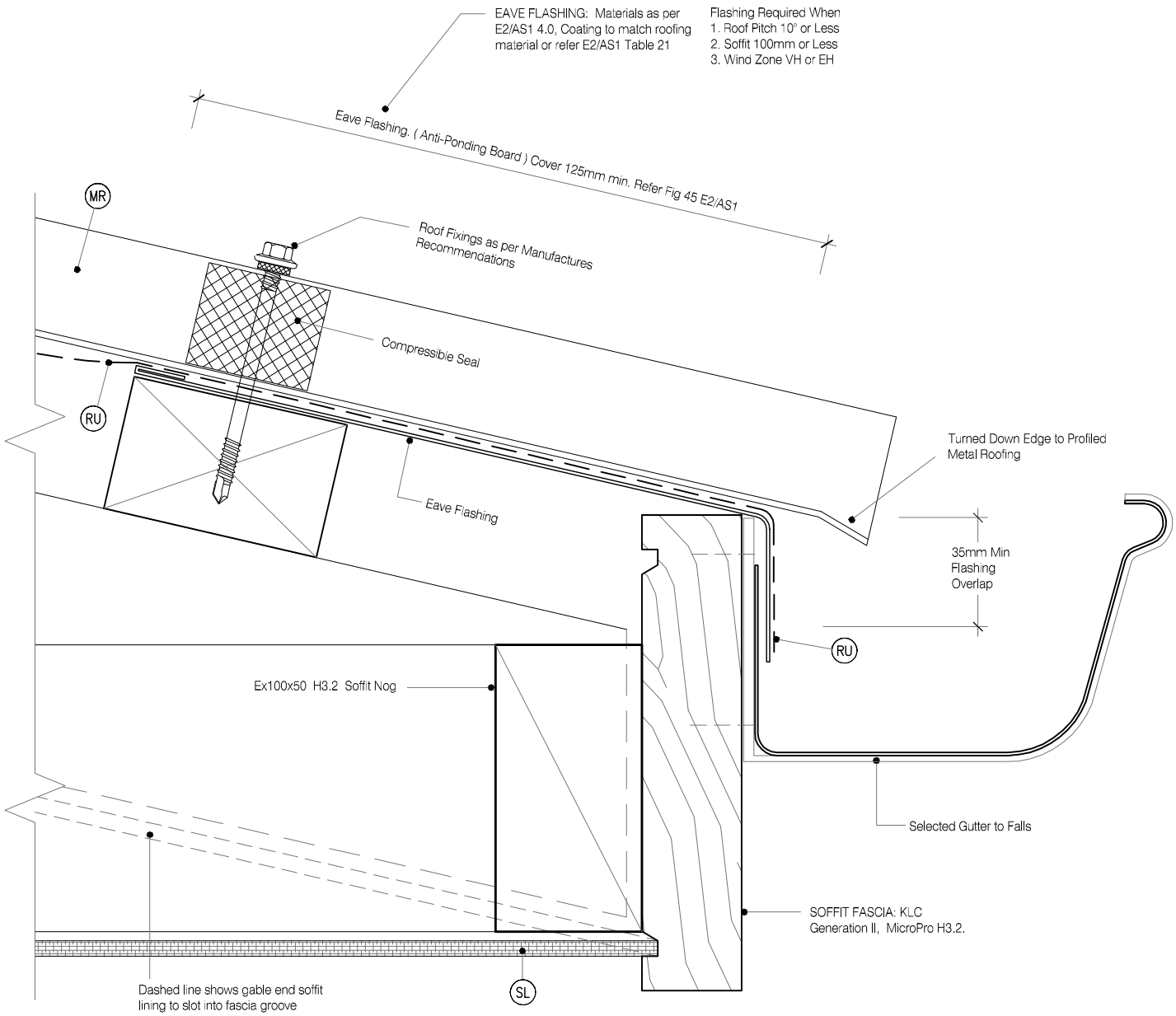

MicoPro® Wood Treatment Technology

1. KLC use the MicroPro Micronized Copper Azole (MCA) based preservative system for their wood products. It accounts for 80% of wood treated in the US for domestic applications
2. Micronized Copper Azole (MCA) preservatives are EPA-approved for use in NZ and AUS to NZS3640:2003 and AS1604.12012
3. MicroPro preservative is applied using high-pressure and vacuum-pressure in the impregnation process in KLC's modern, automated treatment facility.
4. Cut End Treatment : All cut ends surfaces are to be double coated and sealed before fixing. With a alkyd (oil based) primer
5. MicroPro preservative solution has benefits of reduced corrosivity. Use Hot Dip Galvanised Fasteners & Stainless Steel fasteners. MicroPro may be placed in direct contact with Aluminium Building products in interior applications, and above ground exterior applications that provide proper water drainage
6. MicroPro® is the first wood treatment process to be EPP (Environmentally Preferable Product) certified by Scientific Certification Systems based on a life cycle assessment.
7. MicroPro® is environmentally sustainable, is low leaching, low VOC emissions and the award of the GREENGUARD Children and Schools' Certification from the Greenguard® Environmental Institute.
8. MicroPro® Wood Treatment Technology has received a Global GreenTag GreenRate™ Level A this declaration is 'Fit-for-Purpose' and confirmed for Green Building compliance.
9. MicroPro® Wood Treatment Technology has received GreenTag PhD™ proving claims that MicroPro® is safe for human health (and ecosystems).

Naturally Better

www.klc.co.nz

DETAILS MAY BE SUBJECT TO CHANGE WITHOUT NOTICE
COPYRIGHT © "KLC LIMITED" ALL RIGHTS ASSERTED

TYPE Generation II H3.2 Exterior Cladding Systems
Bevel Back Weatherboard - Cavity Fix

NAME Soffit Detail at Fascia

CODEMARK™ AQ-020216-CMNZ

DRAWING SCALE	ISSUE DATE
1:2 @ A4	26/10/2018

DRAWING No	REVISION
KLC CF20 BB63	1

CAD REF : KLC CF20 BB60-66 - GENERAL DETAILS 03.dwg
DATE : 05/11/2018

LEGEND:

- (CB) CAVITY BATTEN: 45x20 KLC Generation II, MicroPro H3.2 FJ Cavity Batten to form a 20mm cavity
- (IL) INTERNAL LINING: Selected Internal Lining
- (BW) BUILDING WRAP: Flexible Wall Underlay, As per NZBC E2/AS1 - Table 23, In extra high wind zones, Ridgid Underlay required (9.1.7.2 E2/AS1)
- (IN) INSULATION: Selected Insulation
- (TF) TIMBER FRAME: H1.2 min treated timber framing
- (FT2) FLEXIBLE FLASHING TAPE: Additional underlay of flexible flashing tape lapped over Apron flashing
- (WB) WEATHER BOARD: KLC Generation II, MicroPro H3.2 Bevel Back Weatherboard. Profile to NZS 3617
- (MR) METAL ROOFING : Selected Metal Roofing
- (RU) ROOFING UNDERLAY: Selected Roofing Underlay As Per AS/AZS4200 with Mesh or Self Supported
- (TP) TIMBER PACKER: Cant Strip, MicroPro H3.2 Treated
- (HS) HEAD SOFFIT SCRIBER: KLC Generation II, MicroPro H3.2. Fix with 75 x 3.15mm Galvanised nail in 3mm predrilled hole
- (AF) APRON FLASHING: Materials as per E2/AS1 4.0, Coating to match roofing material or refer E2/AS1 Table 21. Flashing Cover 130mm min. (L,M & H $\geq$ 10°) All others 200mm Refer Table 7 E2/AS1
- (SL) SOFFIT LINING: As Selected (Typicaly 7.5mm Hardies Soffit Liner)

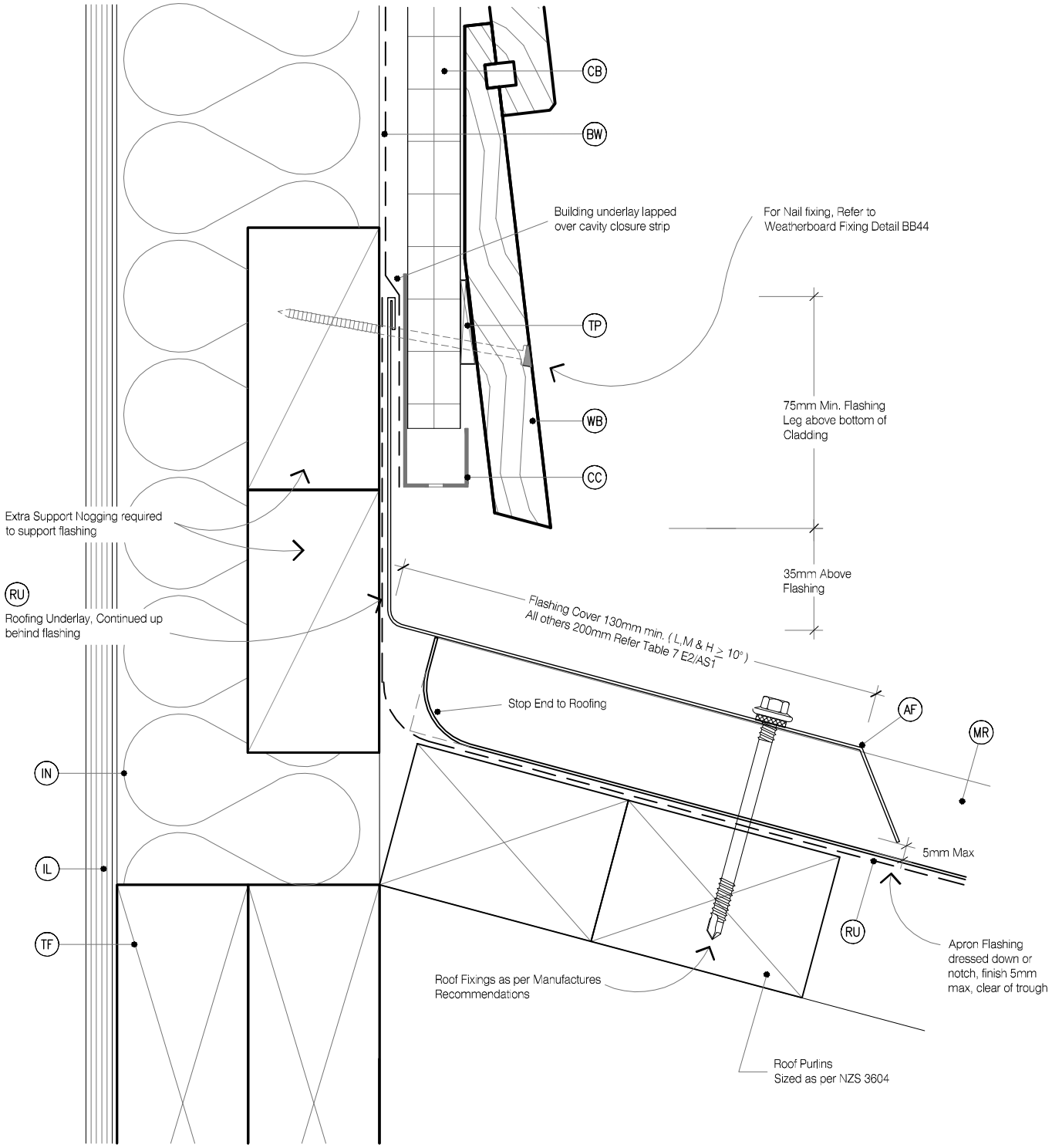

MicoPro® Wood Treatment Technology

1. KLC use the MicroPro Micronized Copper Azole (MCA) based preservative system for their wood products. It accounts for 80% of wood treated in the US for domestic applications
2. Micronized Copper Azole (MCA) preservatives are EPA-approved for use in NZ and AUS to NZS3640:2003 and AS1604.12012
3. MicroPro preservative is applied using high-pressure and vacuum-pressure in the impregnation process in KLC's modern, automated treatment facility.
4. Cut End Treatment : All cut ends surfaces are to be double coated and sealed before fixing. With a alkyd (oil based) primer
5. MicroPro preservative solution has benefits of reduced corrosivity. Use Hot Dip Galvanised Fasteners & Stainless Steel fasteners. MicroPro may be placed in direct contact with Aluminium Building products in interior applications, and above ground exterior applications that provide proper water drainage
6. MicroPro® is the first wood treatment process to be EPP (Environmentally Preferable Product) certified by Scientific Certification Systems based on a life cycle assessment.
7. MicroPro® is environmentally sustainable, is low leaching, low VOC emissions and the award of the GREENGUARD Children and Schools' Certification from the Greenguard® Environmental Institute.
8. MicroPro® Wood Treatment Technology has received a Global GreenTag GreenRate™ Level A this declaration is 'Fit-for-Purpose' and confirmed for Green Building compliance.
9. MicroPro® Wood Treatment Technology has received GreenTag PhD™ proving claims that MicroPro® is safe for human health (and ecosystems).

Naturally Better

www.klc.co.nz

DETAILS MAY BE SUBJECT TO CHANGE WITHOUT NOTICE
COPYRIGHT © "KLC LIMITED" ALL RIGHTS ASSERTED

TYPE Generation II H3.2 Exterior Cladding Systems
Bevel Back Weatherboard - Cavity Fix

NAME Apron Flashing - Roof to Wall Junction

CODEMARK™ AQ-020216-CMNZ

DRAWING SCALE	ISSUE DATE
1:2 @ A4	26/10/2018

DRAWING No	REVISION
KLC CF20 BB64	1

CAD REF : KLC CF20 BB60-66 - GENERAL DETAILS 03.dwg
DATE : 05/11/2018

LEGEND:

- (CB) CAVITY BATTEN: 45x20 KLC Generation II, MicroPro H3.2 FJ Cavity Batten to form a 20mm cavity
- (IL) INTERNAL LINING: Selected Internal Lining
- (BW) BUILDING WRAP: Flexible Wall Underlay, As per NZBC E2/AS1 - Table 23, In extra high wind zones, Ridgid Underlay required (9.1.7.2 E2/AS1)
- (IN) INSULATION: Selected Insulation
- (TF) TIMBER FRAME: H1.2 min treated timber framing
- (FT2) FLEXIBLE FLASHING TAPE: Additional underlay of flexible flashing tape lapped over Apron flashing
- (WB) WEATHER BOARD: KLC Generation II, MicroPro H3.2 Bevel Back Weatherboard. Profile to NZS 3617
- (MR) METAL ROOFING : Selected Metal Roofing
- (RU) ROOFING UNDERLAY: Selected Roofing Underlay As Per AS/AZS4200 with Mesh or Self Supported
- (TP) TIMBER PACKER: Cant Strip, MicroPro H3.2 Treated
- (HS) HEAD SOFFIT SCRIBER: KLC Generation II, MicroPro H3.2. Fix with 75 x 3.15mm Galvanised nail in 3mm predrilled hole
- (AF) APRON FLASHING: Materials as per E2/AS1 4.0, Coating to match roofing material or refer E2/AS1 Table 21. Flashing Cover 130mm min. (L,M & H ≥ 10°) All others 200mm Refer Table 7 E2/AS1
- (SL) SOFFIT LINING: As Selected (Typicaly 7.5mm Hardies Soffit Liner)

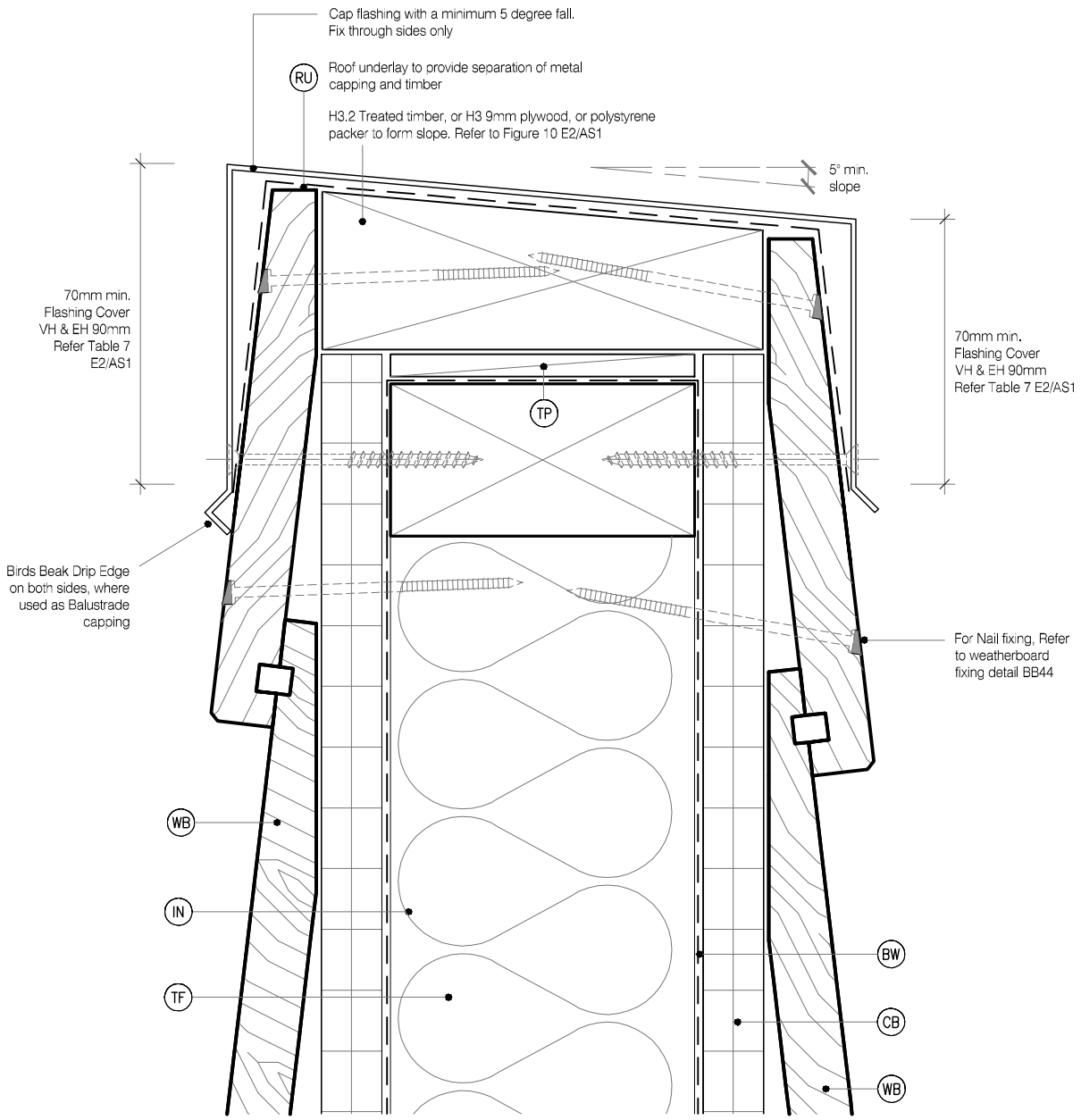

MicoPro® Wood Treatment Technology

1. KLC use the MicroPro Micronized Copper Azole (MCA) based preservative system for their wood products. It accounts for 80% of wood treated in the US for domestic applications
2. Micronized Copper Azole (MCA) preservatives are EPA-approved for use in NZ and AUS to NZS3640:2003 and AS1604.12012
3. MicroPro preservative is applied using high-pressure and vacuum-pressure in the impregnation process in KLC's modern, automated treatment facility.
4. Cut End Treatment : All cut ends surfaces are to be double coated and sealed before fixing. With a alkyd (oil based) primer
5. MicroPro preservative solution has benefits of reduced corrosivity. Use Hot Dip Galvanised Fasteners & Stainless Steel fasteners. MicroPro may be placed in direct contact with Aluminium Building products in interior applications, and above ground exterior applications that provide proper water drainage
6. MicroPro® is the first wood treatment process to be EPP (Environmentally Preferable Product) certified by Scientific Certification Systems based on a life cycle assessment.
7. MicroPro® is environmentally sustainable, is low leaching, low VOC emissions and the award of the GREENGUARD Children and Schools' Certification from the Greenguard® Environmental Institute.
8. MicroPro® Wood Treatment Technology has received a Global GreenTag GreenRate™ Level A this declaration is 'Fit-for-Purpose' and confirmed for Green Building compliance.
9. MicroPro® Wood Treatment Technology has received GreenTag PhD™ proving claims that MicroPro® is safe for human health (and ecosystems).

Naturally Better

www.klc.co.nz

DETAILS MAY BE SUBJECT TO CHANGE WITHOUT NOTICE
COPYRIGHT © "KLC LIMITED" ALL RIGHTS ASSERTED

TYPE Generation II H3.2 Exterior Cladding Systems
Bevel Back Weatherboard - Cavity Fix

NAME Balustrade Capping or Parapet Detail

CODEMARK™ AQ-020216-CMNZ

DRAWING SCALE	ISSUE DATE
1:2 @ A4	26/10/2018

DRAWING No	REVISION
KLC CF20 BB65	1

CAD REF : KLC CF20 BB60-66 - GENERAL DETAILS 03.dwg
DATE : 05/11/2018