LEGEND:

- (PEF) PEF ROD BACKING: Foam backing rod with sealant to cavity in Window perimeter that forms a waterproof air-seal. (Sealant 2:1 Ratio)
- (AJ) ALUMINIUM JOINERY: Selected double glazed aluminium joinery
- (IL) INTERNAL LINING: Selected Internal Lining
- (BW) BUILDING WRAP: Flexible Wall Underlay, As per NZBC E2/AS1 - Table 23, In extra high wind zones, Ridgid Underlay required (9.1.7.2 E2/AS1)
- (SF) SILL FLASHING: Powder Coater Aluminium, extend behind line of Aluminium Frame with 8mm min back upstand and sloping end dams as per Figure 72A E2/AS1
- (JB) JAMB BATTENS: 20mm MicroPro H3.2. Batten stops short of sill flashing, Sill flashing runs under
- (FT1) FLASHING TAPE: Flashing tape over wrap 70mm (50 min) turn-down required in corners only. Refer to Fig. 72 of NZBC E2/AS1
- (FT2) FLEXIBLE FLASHING TAPE: Flexible flashing tape lapped over aluminium head flashing or 2nd layer of Building Wrap to taped joint or top of frame
- (TF) TIMBER FRAME: H1.2 min treated timber framing
- (WB) WEATHER BOARD: KLC Generation II, MicroPro H3.2 Bevel Back Weatherboard. Profile to NZS 3617
- (IN) INSULATION: Selected Insulation
- (HF) HEAD FLASHING: Aluminium head flashing with minimum 15 degree fall and optional hemmed edges as per table 7 E2/AS1
- (TP) TIMBER PACKER: MicroPro H3.2 Treated Packer
- (SS) SILL SCRIBER: MicroPro H3.2, Horizontal batten under window as necessary to suit profile, sealant to back of sill scriber
- (DL) DOOR LINER: As Specified (We Recommend MicroPro H3.2 Liners & Sills)
- (WH) WEATHERHEAD: MicroPro H3.2, Horizontal batten above window as necessary to suit profile, shaped to shed water, sealant to back of sill scriber
- (TP) TIMBER PACKER: MicroPro H3.2 Treated Packer
- (DS) DOOR SCRIBER: KLC Generation II, MicroPro H3.2 profile cut to fit weatherboard, sealant to back of scriber and 75 x 3.15mm Galvanised nail in 3mm predrilled hole. 40x18 or 65x18 depending on weatherboard size

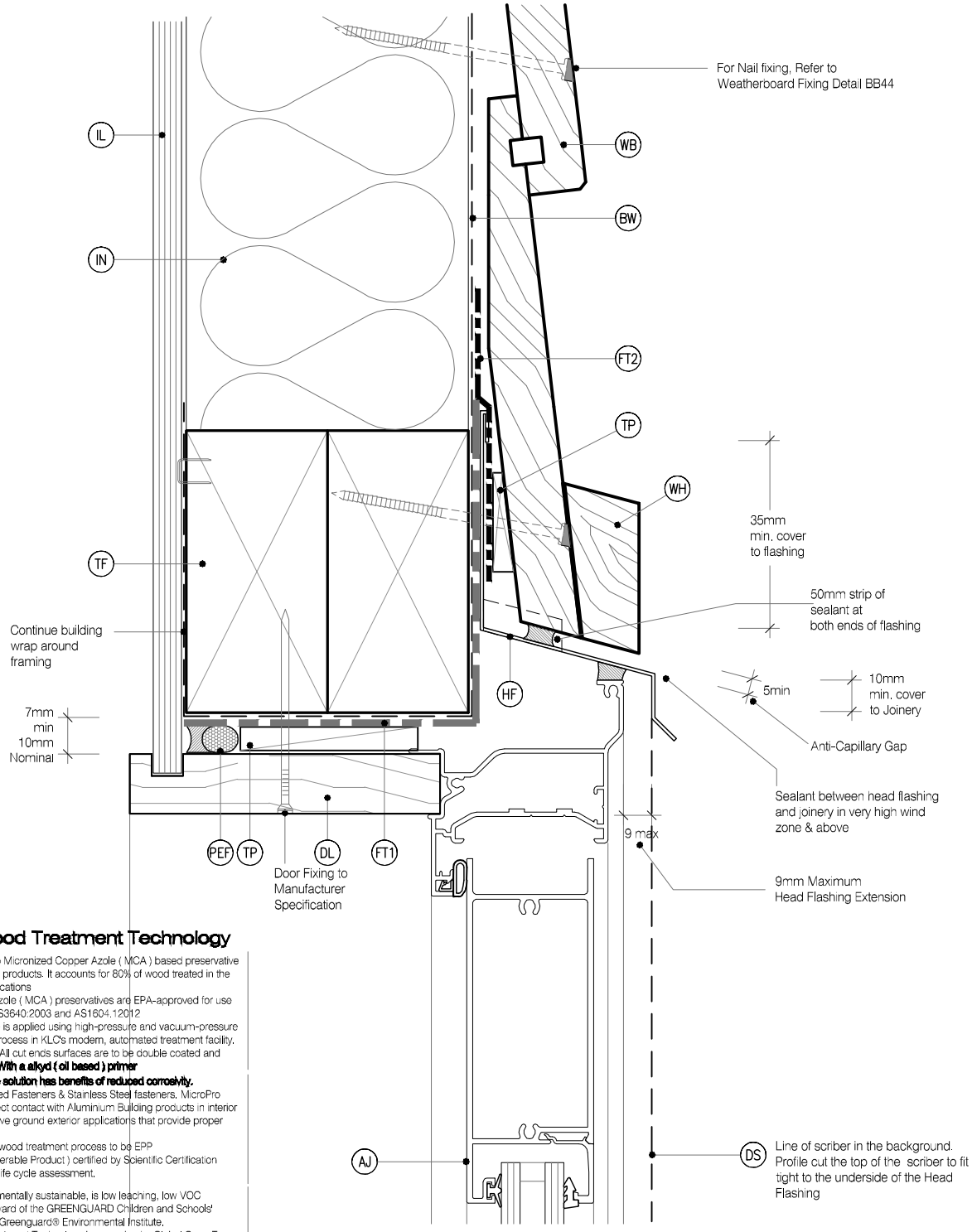

MicoPro® Wood Treatment Technology

1. KLC use the MicroPro Micronized Copper Azole (MCA) based preservative system for their wood products. It accounts for 80% of wood treated in the US for domestic applications
2. Micronized Copper Azole (MCA) preservatives are EPA-approved for use in NZ and AUS to NZS3640:2003 and AS1604.12012
3. MicroPro preservative is applied using high-pressure and vacuum-pressure in the impregnation process in KLC's modern, automated treatment facility.
4. Cut End Treatment : All cut ends surfaces are to be double coated and **sealed before fixing. With a alkyd (oil based) primer**
5. **MicroPro preservative solution has benefits of reduced corrosivity.** Use Hot Dip Galvanised Fasteners & Stainless Steel fasteners. MicroPro may be placed in direct contact with Aluminium Building products in interior applications, and above ground exterior applications that provide proper water drainage
6. MicroPro® is the first wood treatment process to be EPP (Environmentally Preferable Product) certified by Scientific Certification Systems based on a life cycle assessment.
7. MicroPro® is environmentally sustainable, is low leaching, low VOC emissions and the award of the GREENGUARD Children and Schools' Certification from the Greenguard® Environmental Institute.
8. MicroPro® Wood Treatment Technology has received a Global GreenTag GreenRate™ Level A this declaration is 'Fit-for-Purpose' and confirmed for Green Building compliance.
9. MicroPro® Wood Treatment Technology has received GreenTag PhD™ proving claims that MicroPro® is safe for human health (and ecosystems).

CAD REF : KLC DF BB20-25 - DOOR DETAILS.dwg
DATE : 20/11/2018

KLC Naturally Better
www.klc.co.nz
DETAILS MAY BE SUBJECT TO CHANGE WITHOUT NOTICE
COPYRIGHT © "KLC LIMITED" ALL RIGHTS ASSERTED

TYPE Generation II H3.2 Exterior Cladding Systems
Bevel Back Weatherboard - Direct Fix

NAME Door Head Detail - Aluminium Joinery

CODEMARK™ AQ-020216-CMNZ

DRAWING SCALE	ISSUE DATE
1:2 @ A4	20/11/2018

DRAWING No	REVISION
KLC DF BB20	0

LEGEND:

- **PEF** PEF ROD BACKING: Foam backing rod with sealant to cavity in Window perimeter that forms a waterproof air-seal. (Sealant 2:1 Ratio)
- **AJ** ALUMINIUM JOINERY: Selected double glazed aluminium joinery
- **IL** INTERNAL LINING: Selected Internal Lining
- **BW** BUILDING WRAP: Flexible Wall Underlay, As per NZBC E2/AS1 - Table 23, In extra high wind zones, Ridgid Underlay required (9.1.7.2 E2/AS1)
- **SF** SILL FLASHING: Powder Coater Aluminium, extend behind line of Aluminium Frame with 8mm min back upstand and sloping end dams as per Figure 72A E2/AS1
- **JB** JAMB BATTENS: 20mm MicroPro H3.2. Batten stops short of sill flashing, Sill flashing runs under
- **FT1** FLASHING TAPE: Flashing tape over wrap 70mm (50 min) turn-down required in corners only. Refer to Fig. 72 of NZBC E2/AS1
- **FT2** FLEXIBLE FLASHING TAPE: Flexible flashing tape lapped over aluminium head flashing or 2nd layer of Building Wrap to taped joint or top of frame
- **TF** TIMBER FRAME: H1.2 min treated timber framing
- **WB** WEATHER BOARD: KLC Generation II, MicroPro H3.2 Bevel Back Weatherboard. Profile to NZS 3617
- **IN** INSULATION: Selected Insulation
- **HF** HEAD FLASHING: Aluminium head flashing with minimum 15 degree fall and optional hemmed edges as per table 7 E2/AS1
- **TP** TIMBER PACKER: MicroPro H3.2 Treated Packer
- **SS** SILL SCRIBER: MicroPro H3.2, Horizontal batten under window as necessary to suit profile, sealant to back of sill scriber
- **DL** DOOR LINER: As Specified (We Recommend MicroPro H3.2 Liners & Sills)
- **WH** WEATHERHEAD: MicroPro H3.2, Horizontal batten above window as necessary to suit profile, shaped to shed water, sealant to back of sill scriber
- **TP** TIMBER PACKER: MicroPro H3.2 Treated Packer
- **DS** DOOR SCRIBER: KLC Generation II, MicroPro H3.2 profile cut to fit weatherboard, sealant to back of scriber and 75 x 3.15mm Galvanised nail in 3mm predrilled hole. 40x18 or 65x18 depending on weatherboard size

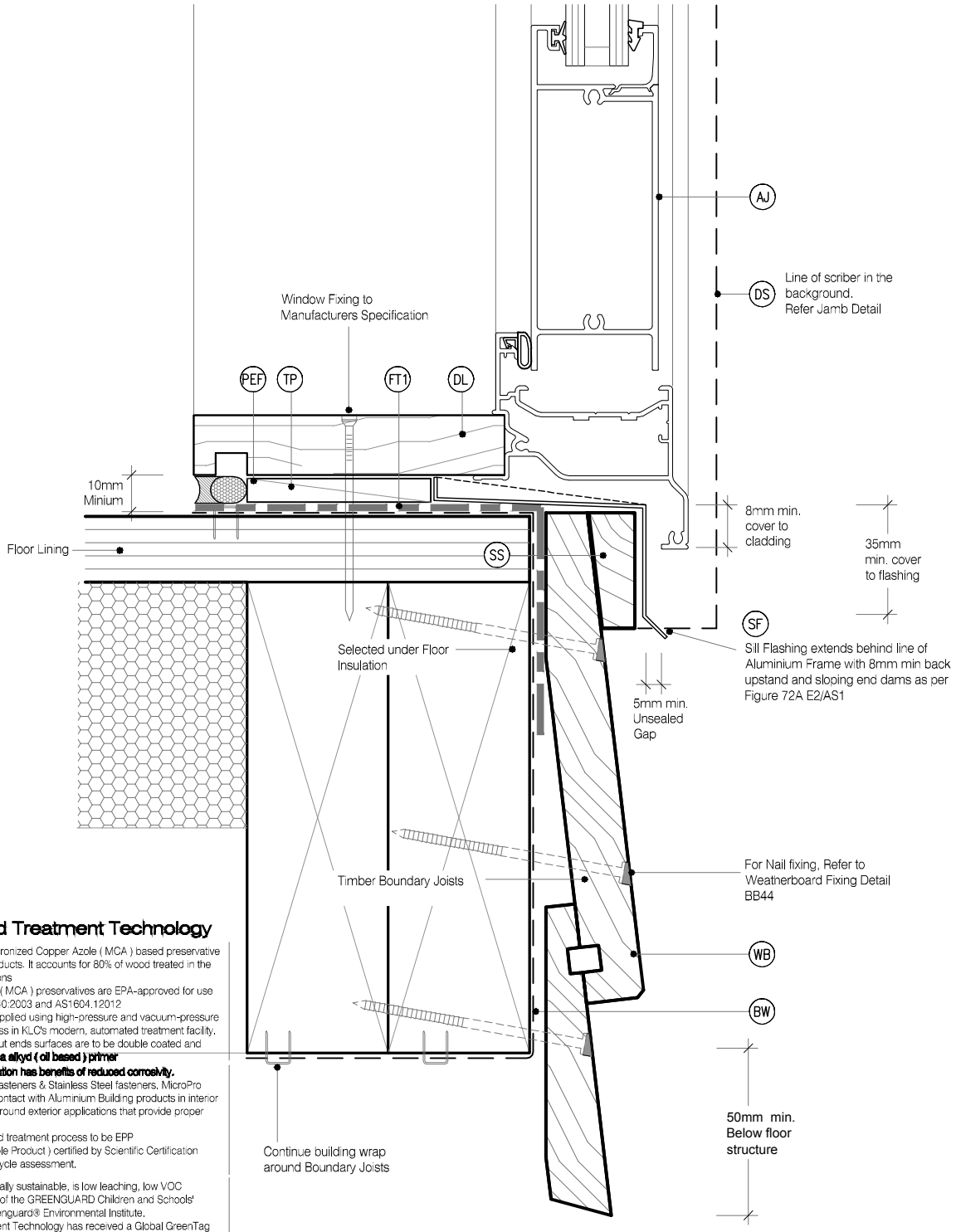

MicoPro® Wood Treatment Technology

1. KLC use the MicroPro Micronized Copper Azole (MCA) based preservative system for their wood products. It accounts for 80% of wood treated in the US for domestic applications
2. Micronized Copper Azole (MCA) preservatives are EPA-approved for use in NZ and AUS to NZS3640:2003 and AS1604.12012
3. MicroPro preservative is applied using high-pressure and vacuum-pressure in the impregnation process in KLC's modern, automated treatment facility.
4. Cut End Treatment : All cut ends surfaces are to be double coated and **sealed before fixing. With a alkyd (oil based) primer**
5. **MicroPro preservative solution has benefits of reduced corrosivity.** Use Hot Dip Galvanised Fasteners & Stainless Steel fasteners. MicroPro may be placed in direct contact with Aluminium Building products in interior applications, and above ground exterior applications that provide proper water drainage
6. MicroPro® is the first wood treatment process to be EPP (Environmentally Preferable Product) certified by Scientific Certification Systems based on a life cycle assessment.
7. MicroPro® is environmentally sustainable, is low leaching, low VOC emissions and the award of the GREENGUARD Children and Schools' Certification from the Greenguard® Environmental Institute.
8. MicroPro® Wood Treatment Technology has received a Global GreenTag GreenRate™ Level A this declaration is 'Fit-for-Purpose' and confirmed for Green Building compliance.
9. MicroPro® Wood Treatment Technology has received GreenTag PhD™ proving claims that MicroPro® is safe for human health (and ecosystems).

CAD REF : KLC DF BB20-25 - DOOR DETAILS.dwg
DATE : 20/11/2018

Naturally Better
www.klc.co.nz
DETAILS MAY BE SUBJECT TO CHANGE WITHOUT NOTICE
COPYRIGHT © "KLC LIMITED" ALL RIGHTS ASSERTED

TYPE Generation II H3.2 Exterior Cladding Systems
Bevel Back Weatherboard - Direct Fix

NAME Door Sill Detail - Aluminium Joinery

CODEMARK™ AQ-020216-CMNZ

DRAWING SCALE	ISSUE DATE
1:2 @ A4	20/11/2018

DRAWING No	REVISION
KLC DF BB21	0

LEGEND:

- (PEF) PEF ROD BACKING: Foam backing rod with sealant to cavity in Window perimeter that forms a waterproof air-seal. (Sealant 2:1 Ratio)
- (AJ) ALUMINIUM JOINERY: Selected double glazed aluminium joinery
- (IL) INTERNAL LINING: Selected Internal Lining
- (BW) BUILDING WRAP: Flexible Wall Underlay, As per NZBC E2/AS1 - Table 23, In extra high wind zones, Ridgid Underlay required (9.1.7.2 E2/AS1)
- (SF) SILL FLASHING: Powder Coater Aluminium, extend behind line of Aluminium Frame with 8mm min back upstand and sloping end dams as per Figure 72A E2/AS1
- (JB) JAMB BATTENS: 20mm MicroPro H3.2. Batten stops short of sill flashing, Sill flashing runs under
- (FT1) FLASHING TAPE: Flashing tape over wrap 70mm (50 min) turn-down required in corners only. Refer to Fig. 72 of NZBC E2/AS1
- (FT2) FLEXIBLE FLASHING TAPE: Flexible flashing tape lapped over aluminium head flashing or 2nd layer of Building Wrap to taped joint or top of frame
- (TF) TIMBER FRAME: H1.2 min treated timber framing
- (WB) WEATHER BOARD: KLC Generation II, MicroPro H3.2 Bevel Back Weatherboard. Profile to NZS 3617
- (IN) INSULATION: Selected Insulation
- (HF) HEAD FLASHING: Aluminium head flashing with minimum 15 degree fall and optional hemmed edges as per table 7 E2/AS1
- (TP) TIMBER PACKER: MicroPro H3.2 Treated Packer
- (SS) SILL SCRIBER: MicroPro H3.2, Horizontal batten under window as necessary to suit profile, sealant to back of sill scriber
- (DL) DOOR LINER: As Specified (We Recommend MicroPro H3.2 Liners & Sills)
- (WH) WEATHERHEAD: MicroPro H3.2, Horizontal batten above window as necessary to suit profile, shaped to shed water, sealant to back of sill scriber
- (TP) TIMBER PACKER: MicroPro H3.2 Treated Packer
- (DS) DOOR SCRIBER: KLC Generation II, MicroPro H3.2 profile cut to fit weatherboard, sealant to back of scriber and 75 x 3.15mm Galvanised nail in 3mm predrilled hole. 40x18 or 65x18 depending on weatherboard size

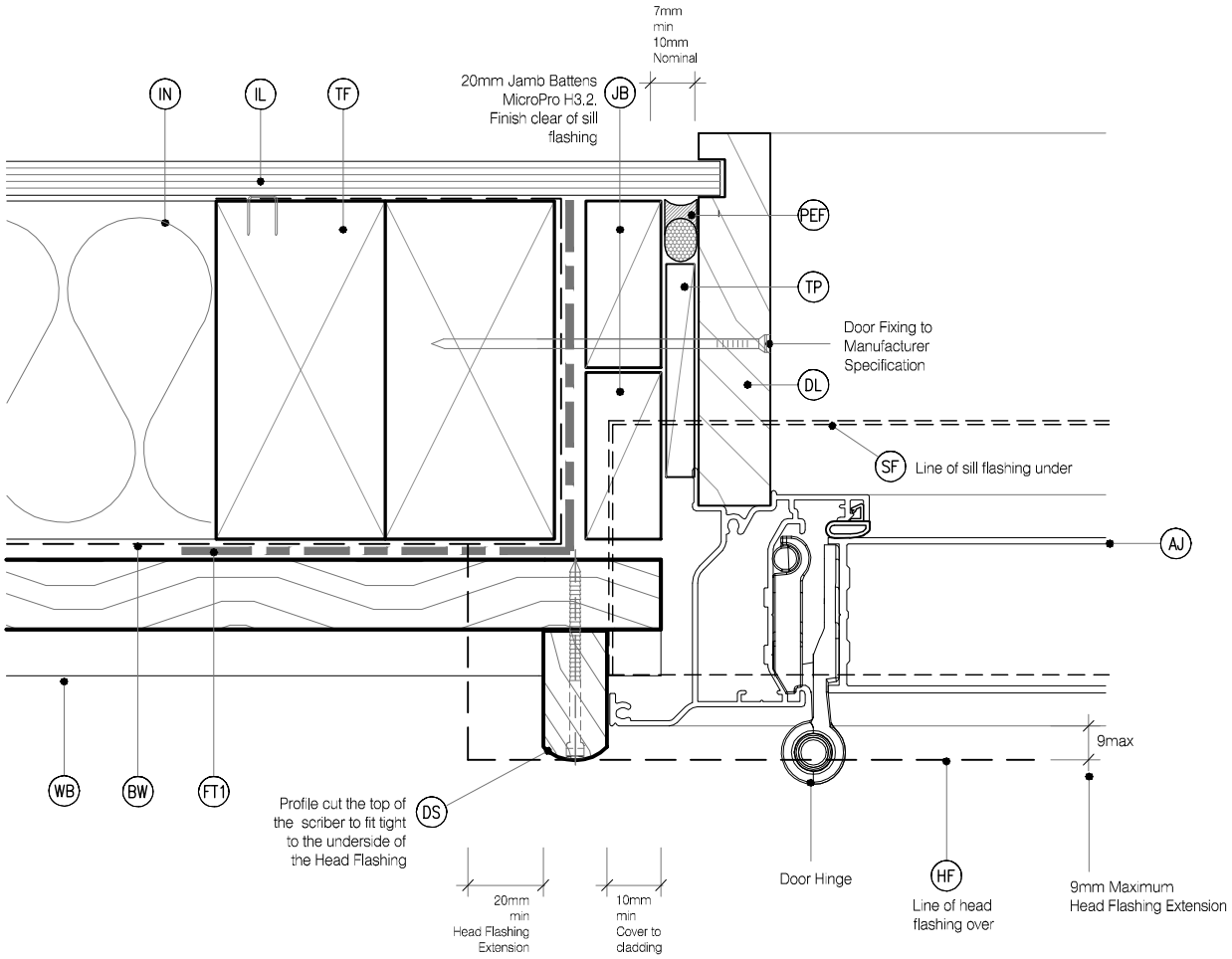

MicoPro® Wood Treatment Technology

1. KLC use the MicroPro Micronized Copper Azole (MCA) based preservative system for their wood products. It accounts for 80% of wood treated in the US for domestic applications
2. Micronized Copper Azole (MCA) preservatives are EPA-approved for use in NZ and AUS to NZS3640:2003 and AS1604.12012
3. MicroPro preservative is applied using high-pressure and vacuum-pressure in the impregnation process in KLC's modern, automated treatment facility.
4. Cut End Treatment : All cut ends surfaces are to be double coated and sealed before fixing. With a alkyd (oil based) primer
5. MicroPro preservative solution has benefits of reduced corrosivity. Use Hot Dip Galvanised Fasteners & Stainless Steel fasteners. MicroPro may be placed in direct contact with Aluminium Building products in interior applications, and above ground exterior applications that provide proper water drainage
6. MicroPro® is the first wood treatment process to be EPP (Environmentally Preferable Product) certified by Scientific Certification Systems based on a life cycle assessment.
7. MicroPro® is environmentally sustainable, is low leaching, low VOC emissions and the award of the GREENGUARD Children and Schools' Certification from the Greenguard® Environmental Institute.
8. MicroPro® Wood Treatment Technology has received a Global GreenTag GreenRate™ Level A this declaration is 'Fit-for-Purpose' and confirmed for Green Building compliance.
9. MicroPro® Wood Treatment Technology has received GreenTag PhD™ proving claims that MicroPro® is safe for human health (and ecosystems).

CAD REF :KLC DF BB20-25 - DOOR DETAILS.dwg
DATE :20/11/2018

Naturally Better
www.klc.co.nz
DETAILS MAY BE SUBJECT TO CHANGE WITHOUT NOTICE
COPYRIGHT © "KLC LIMITED" ALL RIGHTS ASSERTED

TYPE Generation II H3.2 Exterior Cladding Systems
Bevel Back Weatherboard - Direct Fix

NAME Door Jamb Detail - Aluminium Joinery

CODEMARK™
AQ-020216-CMNZ

DRAWING SCALE	ISSUE DATE
1:2 @ A4	20/11/2018

DRAWING No	REVISION
KLC DF BB22	0

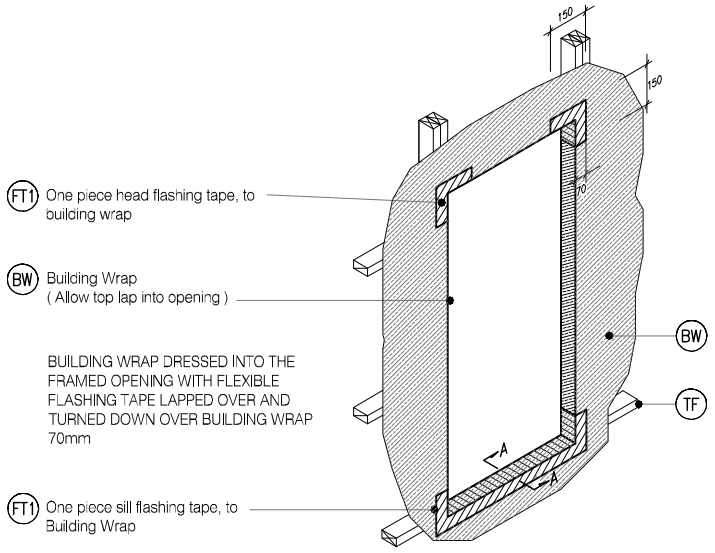

D4 TYPICAL DOOR OPENING (FLASHING TAPE)

BB23 SCALE : N.T.S

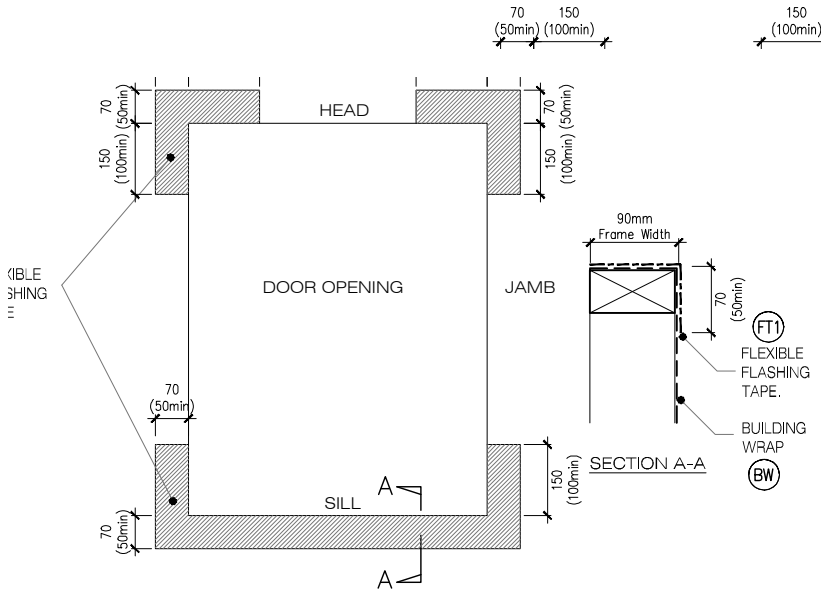

D5 FLEXIBLE BUILDING WRAP AT OPENING

BB23 SCALE : 1 / 5 @ A1, 1 / 10 @ A3

MicoPro® Wood Treatment Technology

1. KLC use the MicroPro Micronized Copper Azole (MCA) based preservative system for their wood products. It accounts for 80% of wood treated in the US for domestic applications
2. Micronized Copper Azole (MCA) preservatives are EPA-approved for use in NZ and AUS to NZS3640:2003 and AS1604.12012
3. MicroPro preservative is applied using high-pressure and vacuum-pressure in the impregnation process in KLC's modern, automated treatment facility.
4. Cut End Treatment : All cut ends surfaces are to be double coated and **sealed before fixing. With a alkyd (oil based) primer**
5. **MicroPro preservative solution has benefits of reduced corrosivity.** Use Hot Dip Galvanised Fasteners & Stainless Steel fasteners, MicroPro may be placed in direct contact with Aluminium Building products in interior applications, and above ground exterior applications that provide proper water drainage
6. MicroPro® is the first wood treatment process to be EPP (Environmentally Preferable Product) certified by Scientific Certification Systems based on a life cycle assessment.
7. MicroPro® is environmentally sustainable, is low leaching, low VOC emissions and the award of the GREENGUARD Children and Schools' Certification from the Greenguard® Environmental Institute.
8. MicroPro® Wood Treatment Technology has received a Global GreenTag GreenRate™ Level A this declaration is 'Fit-for-Purpose' and confirmed for Green Building compliance.
9. MicroPro® Wood Treatment Technology has received GreenTag PhD™ proving claims that MicroPro® is safe for human health (and ecosystems).

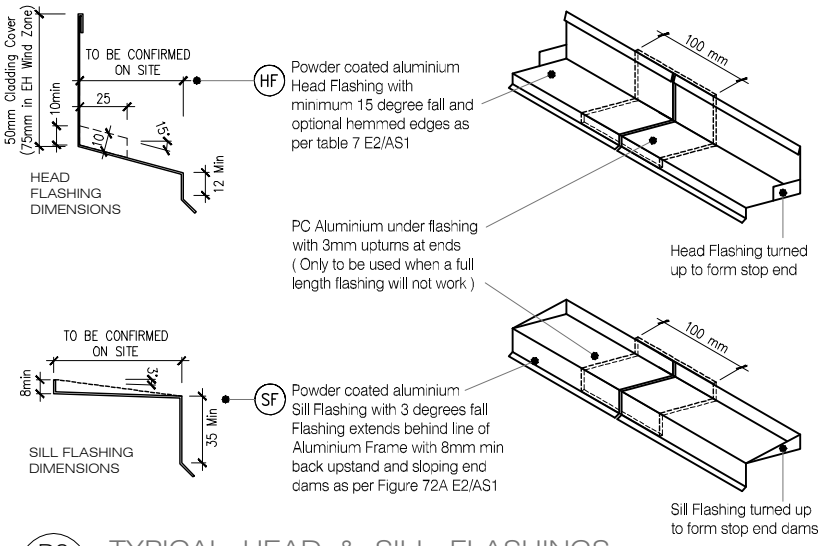

D6 TYPICAL HEAD & SILL FLASHINGS

BB23 SCALE : 1 / 2 @ A1, 1 / 4 @ A3

CAD REF : KLC DF BB20-25 - DOOR DETAILS.dwg
DATE : 20/11/2018

Naturally Better
www.klc.co.nz

DETAILS MAY BE SUBJECT TO CHANGE WITHOUT NOTICE
COPYRIGHT © "KLC LIMITED" ALL RIGHTS ASSERTED

TYPE Generation II H3.2 Exterior Cladding Systems
Bevel Back Weatherboard - Direct Fix

NAME Door Flashing Details - Aluminium Joinery

CODEMARK™ AQ-020216-CMNZ

DRAWING SCALE	ISSUE DATE
1:4 @ A4	20/11/2018

DRAWING No	REVISION
KLC DF BB23	0